DIST	COUNTY	ROUTE	KILOMETER POST TOTAL PROJECT	SHEET No	TOTAL SHEETS
04	SF, Ala	80	12.2/14.3 0.0/4.0	407a 09S45	1204

Syn Yee Chin 03/08/10
REGISTERED ELECTRICAL ENGINEER DATE

05-06-2010
PLANS APPROVAL DATE

REGISTERED PROFESSIONAL ENGINEER
SYN YEE CHIN
No. 18186
Exp. 09/30/2011
ELECTRICAL
STATE OF CALIFORNIA

PB AMERICAS, Inc.
A Parsons Brinckerhoff Company
303 Second St., Suite 700N
San Francisco, CA 94107-1317

The State of California or its officers or agents shall not be responsible for the accuracy or completeness of electronic copies of this plan sheet.

Caltrans now has a web site! To get to the web site, go to http://www.dot.ca.gov

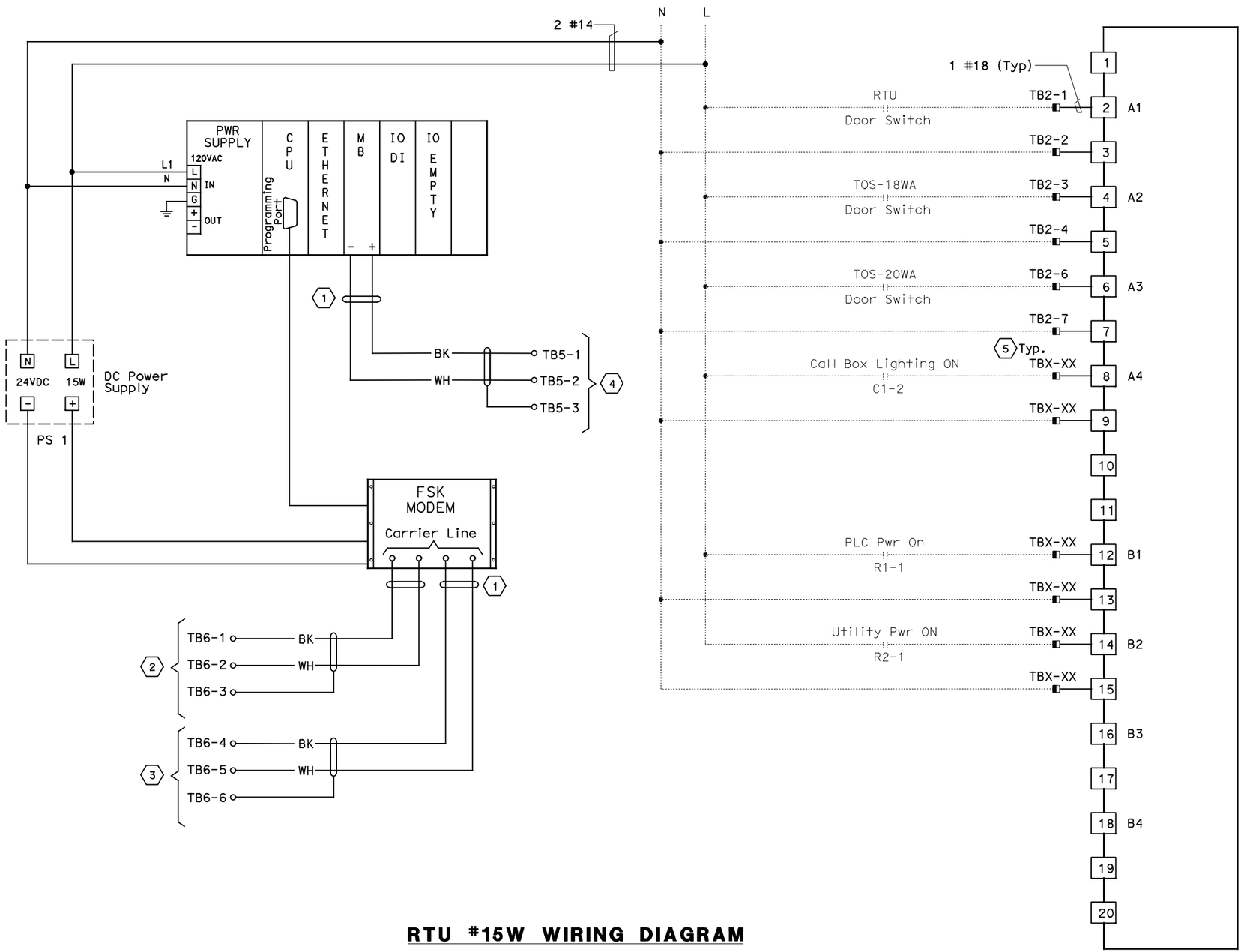

RTU #15W WIRING DIAGRAM

RTU #15W
8 POINT DIGITAL INPUT
RACK 1, SLOT 4

NOTES:

1. Contractor shall install input card. See sheet E-931 for location.
2. Contractor shall wire connection shown by bold lines.

SHEET NOTES:

(1) Contractor to tape shield. This circuit is not to be grounded at this end.
(2) Pair 1 of 50 pair SCADA cable.
(3) Pair 2 of 50 pair SCADA cable.
(4) To Call Box Communications cable RS-485.
(5) Contractor shall field verify the "TBX-XX" terminal block designations and equipment contact identification.

REQUEST FOR INFORMATION NOT ADDRESSED IN THIS CCO REMAIN IN FORCE

MARK	DATE	DESCRIPTIONS	BY	CH'D	CCO#
0	03/08/10	MEP INTEGRATION	JE	FW	110

REVISIONS

CONTRACT CHANGE ORDER NO._____
SHEET _____ OF _____

DETAILS
SCADA REMOTE TERMINAL UNIT SYSTEM
RTU #15W WIRING DIAGRAM
NO SCALE

E-936

THIS PLAN ACCURATE FOR ELECTRICAL WORK ONLY.

STATE OF CALIFORNIA - DEPARTMENT OF TRANSPORTATION
Caltrans

DESIGN OVERSIGHT
BEHZAD GOLEMOHAMMADI

CALCULATED/DESIGNED BY SYC
CHECKED BY FW
DATE 01/10 01/10
REVISED BY DATE REVISED

FOR REDUCED PLANS ORIGINAL SCALE IS IN MILLIMETERS 0 20 40 60 80

DGN FILE =>04-0120f1_E-936.dgn
USERNAME =>llorico

CU 04251
EA 0120F1

LAST REVISION 00-00-00
DATE PLOTTED => 06-MAY-2010
TIME PLOTTED => 19:09