DIST	COUNTY	ROUTE	KILOMETER POST TOTAL PROJECT	SHEET No	TOTAL SHEETS
04	SF,Ala	80	12.2/14.3 0.0/4.0	407a 09S42	1204

Syn Yee Chin 03/08/10
REGISTERED ELECTRICAL ENGINEER DATE

05-06-2010
PLANS APPROVAL DATE

REGISTERED PROFESSIONAL ENGINEER SYN YEE CHIN No. 18186 Exp. 09/30/2011 ELECTRICAL STATE OF CALIFORNIA

PB AMERICAS, Inc.
A Parsons Brinckerhoff Company
303 Second St., Suite 700N
San Francisco, CA 94107-1317

The State of California or its officers or agents shall not be responsible for the accuracy or completeness of electronic copies of this plan sheet.

Caltrans now has a web site! To get to the web site, go to http://www.dot.ca.gov

Caltrans Metric

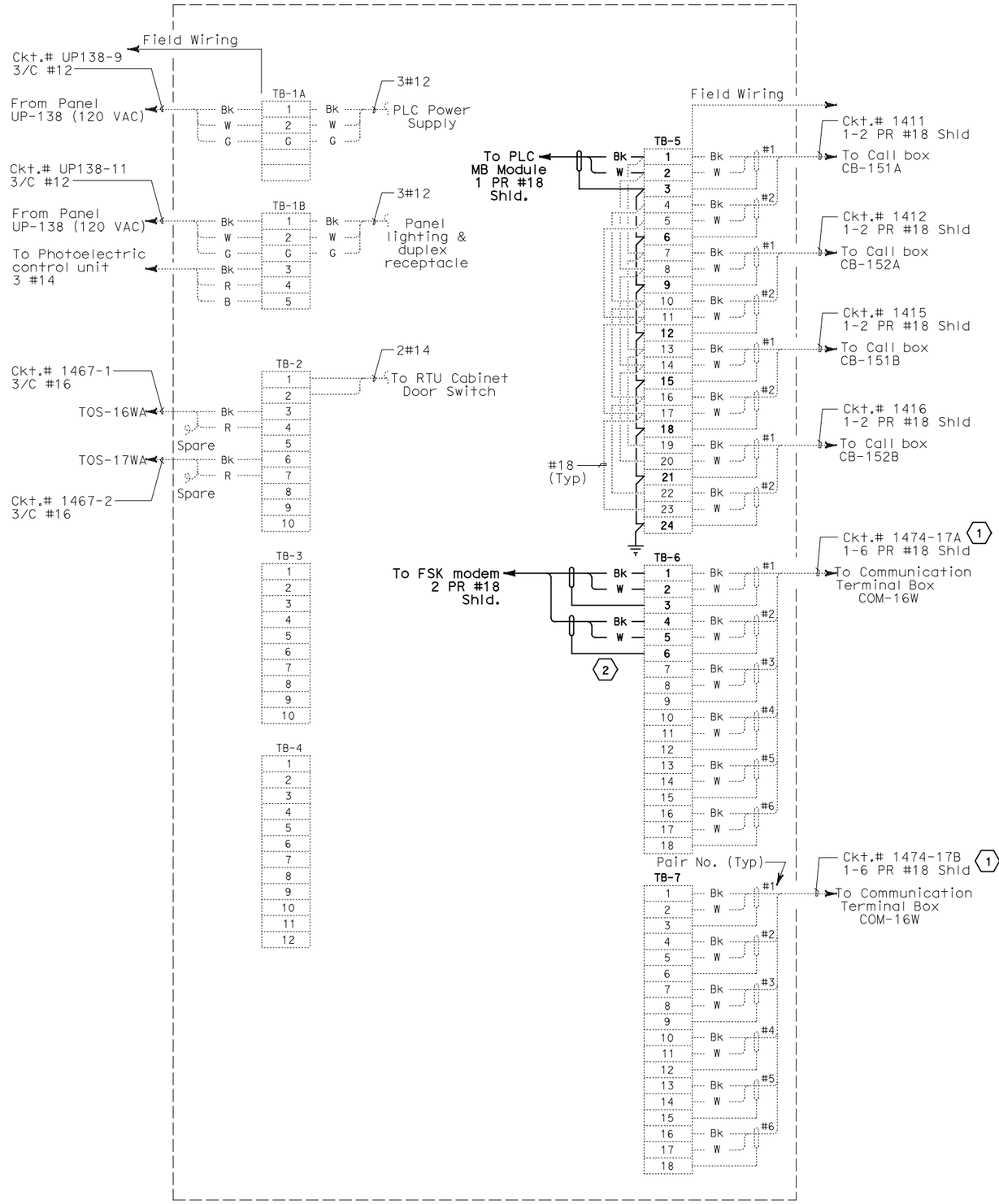

CONNECTION DIAGRAM - RTU #14W

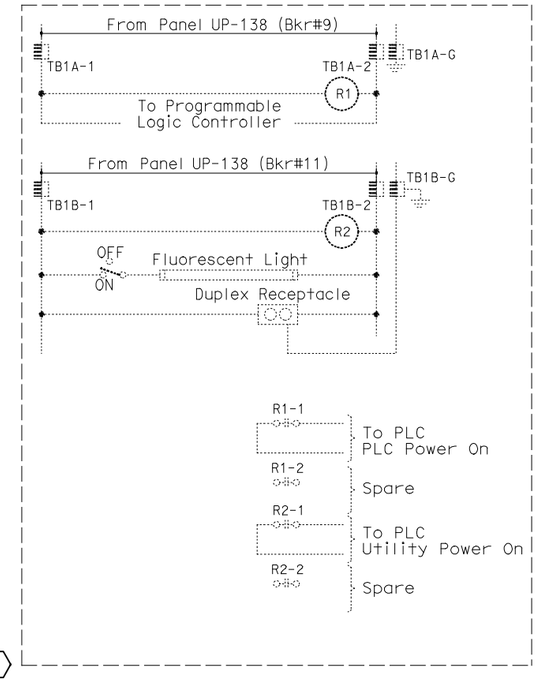

ELEMENTARY DIAGRAM - RTU#14W

NOTES:

1. This Plan Sheet is a record drawing of the Skyway Structures Remote Terminal Unit No. 14W. The Contractor shall verify the existing installation. See sheet EE-352 from the Skyway Structures, contract No. 04-012024.
2. References: See sheet E-932.
3. Contractor shall wire connection shown by bold lines.

SHEET NOTES:

(1) Verify that shield is not grounded.

(2) Do not ground the shield.

REQUEST FOR INFORMATION NOT ADDRESSED IN THIS CCO REMAIN IN FORCE

MARK	DATE	DESCRIPTIONS	BY	CH'D	CCO#
0	03/08/10	MEP INTEGRATION	JE	FW	110

REVISIONS

CONTRACT CHANGE ORDER NO._____
SHEET _____ OF _____

DETAILS
SCADA REMOTE TERMINAL UNIT SYSTEM
RTU #14W ELEMENTARY AND CONNECTION DIAGRAMS
NO SCALE

E-933

THIS PLAN ACCURATE FOR ELECTRICAL WORK ONLY.

STATE OF CALIFORNIA - DEPARTMENT OF TRANSPORTATION
Caltrans

DESIGN OVERSIGHT: BEHZAD GOLEMOHAMMADI

CALCULATED/DESIGNED BY: SYC | DATE 01/10 | REVISED BY
CHECKED BY: FW | 01/10 | DATE REVISED

LAST REVISION 00-00-00

DATE PLOTTED => 06-MAY-2010
TIME PLOTTED => 19:09

FOR REDUCED PLANS ORIGINAL SCALE IS IN MILLIMETERS 0 20 40 60 80

DGN FILE =>04-0120f1_E-933.dgn
USERNAME =>llorico

CU 04251 | EA 0120F1