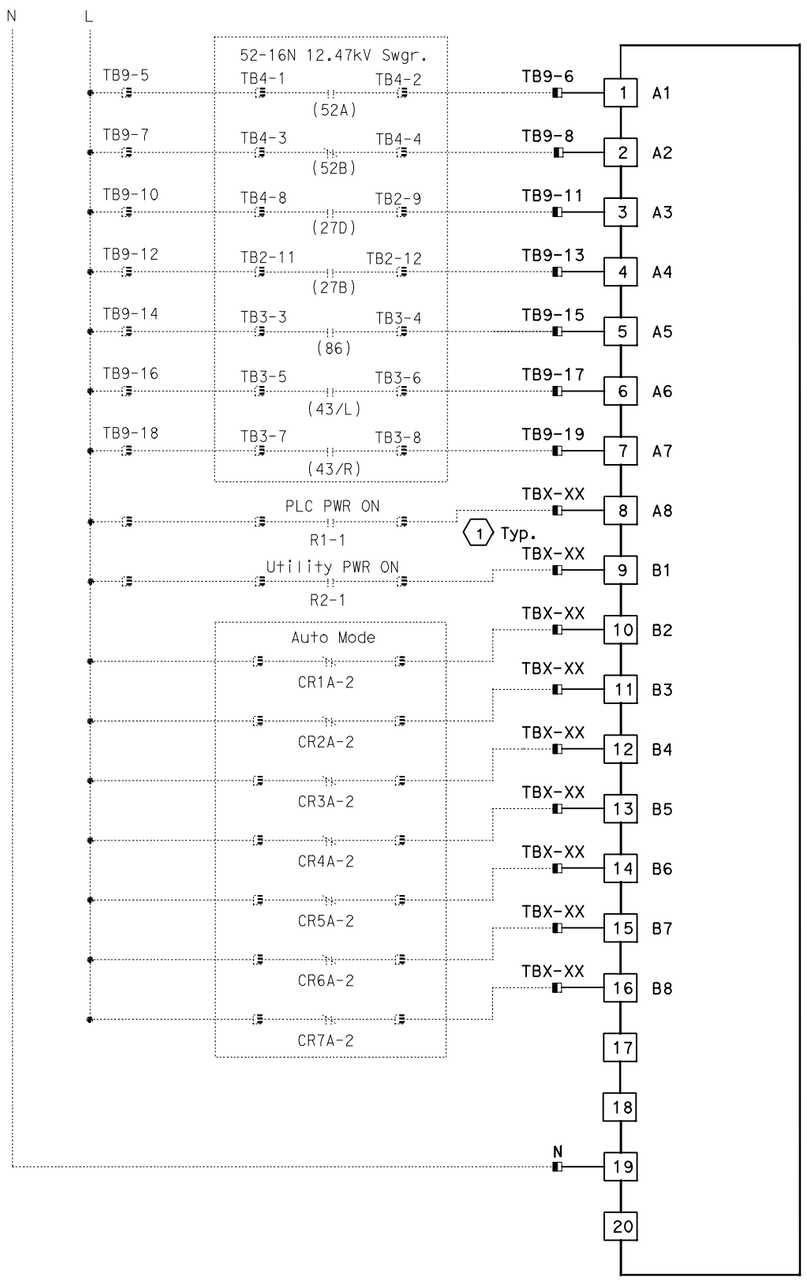

RTU #13E
16 POINT DIGITAL INPUT
RACK 1, SLOT 8

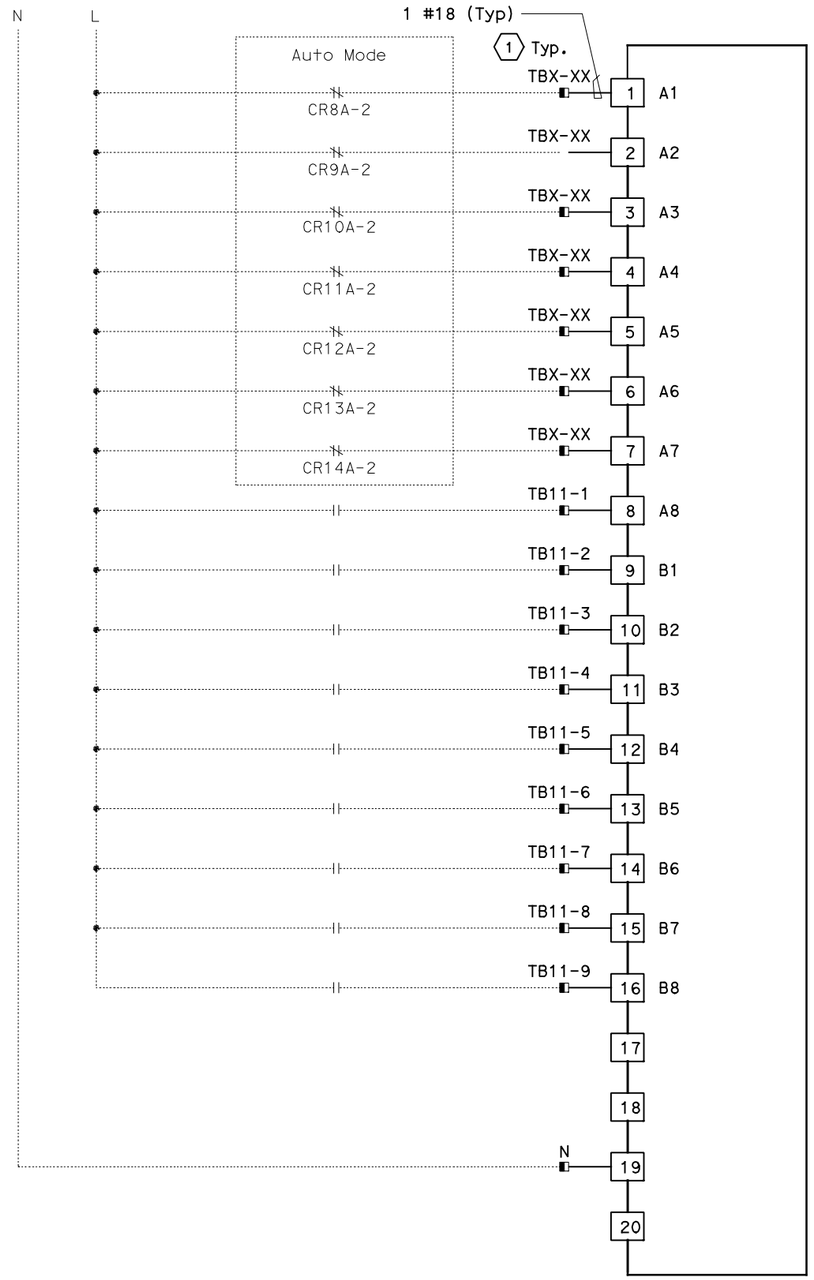

RTU #13E
16 POINT DIGITAL INPUT
RACK 1, SLOT 9

DIST	COUNTY	ROUTE	KILOMETER POST TOTAL PROJECT	SHEET No	TOTAL SHEETS
04	SF,Ala	80	12.2/14.3 0.0/4.0	407a 09S34	1204

Caltrans Metric

Syn Yee Chin 03/08/10
REGISTERED ELECTRICAL ENGINEER DATE

05-06-2010
PLANS APPROVAL DATE

REGISTERED PROFESSIONAL ENGINEER SYN YEE CHIN No. 18186 Exp. 09/30/2011 ELECTRICAL STATE OF CALIFORNIA

PB AMERICAS, Inc.
A Parsons Brinckerhoff Company
303 Second St., Suite 700N
San Francisco, CA 94107-1317

The State of California or its officers or agents shall not be responsible for the accuracy or completeness of electronic copies of this plan sheet.

Caltrans now has a web site! To get to the web site, go to http://www.dot.ca.gov

NOTES:

1. Contractor shall install input cards. See sheet E-910 for location.
2. Contractor shall wire connection shown by bold lines

SHEET NOTES:

1. Contractor to field verify the "TBX-XX" terminal block designations and equipment contact identification.

REQUEST FOR INFORMATION NOT ADDRESSED IN THIS CCO REMAIN IN FORCE

MARK	DATE	DESCRIPTIONS	BY	CH'D	CCO#
0	03/08/10	MEP INTEGRATION	JE	FW	110

REVISIONS

CONTRACT CHANGE ORDER NO._____
SHEET_____ OF _____

DETAILS
SCADA REMOTE TERMINAL UNIT SYSTEM
RTU #13E WIRING DIAGRAM
NO SCALE

E-926

STATE OF CALIFORNIA - DEPARTMENT OF TRANSPORTATION
Caltrans

DESIGN OVERSIGHT: BEHZAD GOLEMOHAMMADI
CALCULATED/DESIGNED BY: SYC DATE 01/10
CHECKED BY: FW 01/10
REVISED BY
DATE REVISED

THIS PLAN ACCURATE FOR ELECTRICAL WORK ONLY.

FOR REDUCED PLANS ORIGINAL SCALE IS IN MILLIMETERS 0 20 40 60 80

DGN FILE =>04-0120f1_E-926.dgn
USERNAME =>llorico

CU 04251 EA 0120F1

LAST REVISION 00-00-00
DATE PLOTTED => 06-MAY-2010
TIME PLOTTED => 19:08