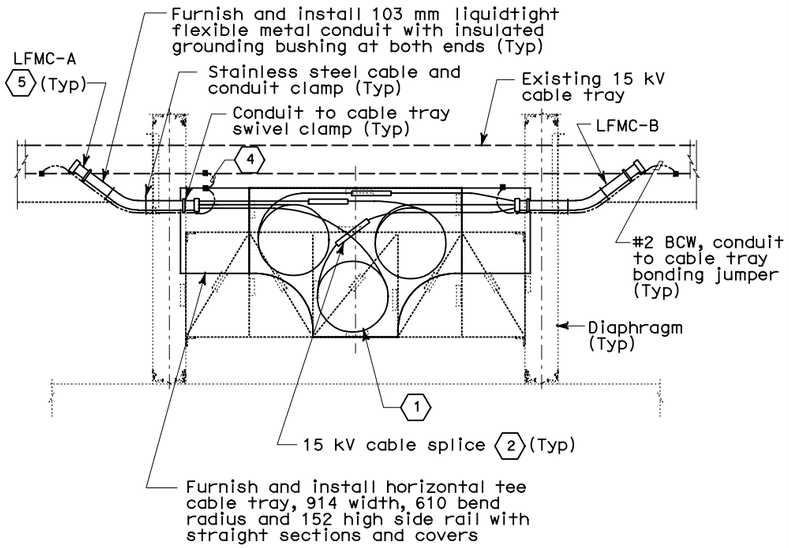

PLAN - DETAIL 1

15 kV Splice Cable Tray installation between diaphragms

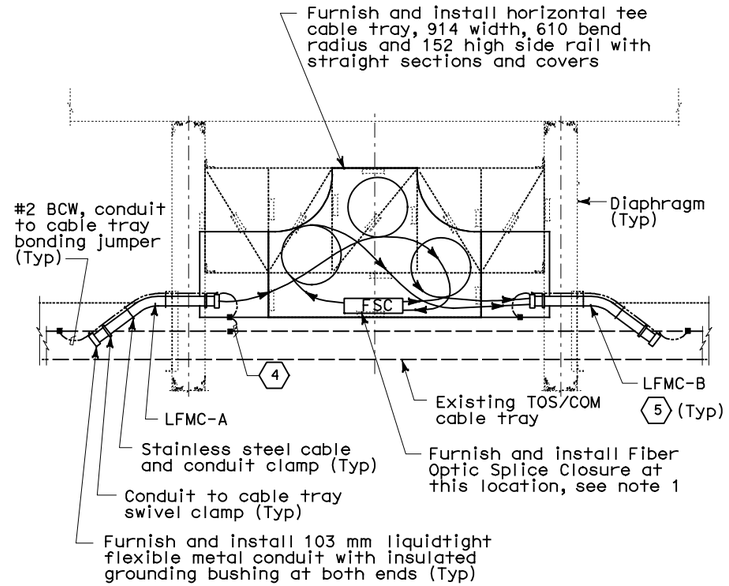

PLAN - DETAIL 2

TOS/COM Splice Cable Tray installation between diaphragms

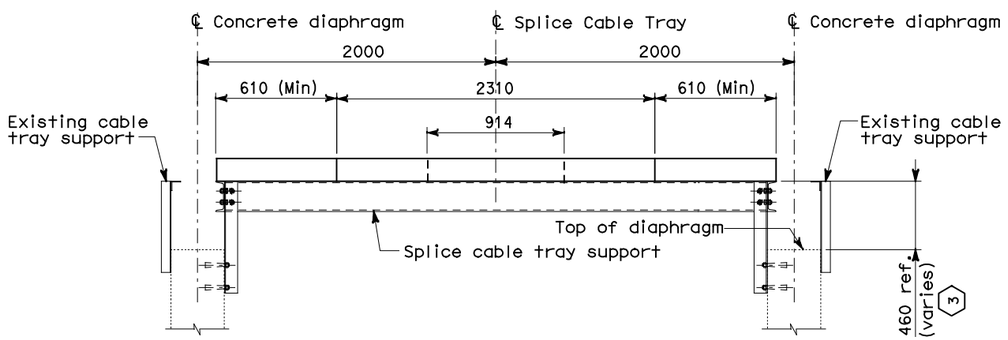

SECTION - DETAIL 4

Splice Cable Tray Support on Concrete Diaphragms
Refer to AS-20 for structural details

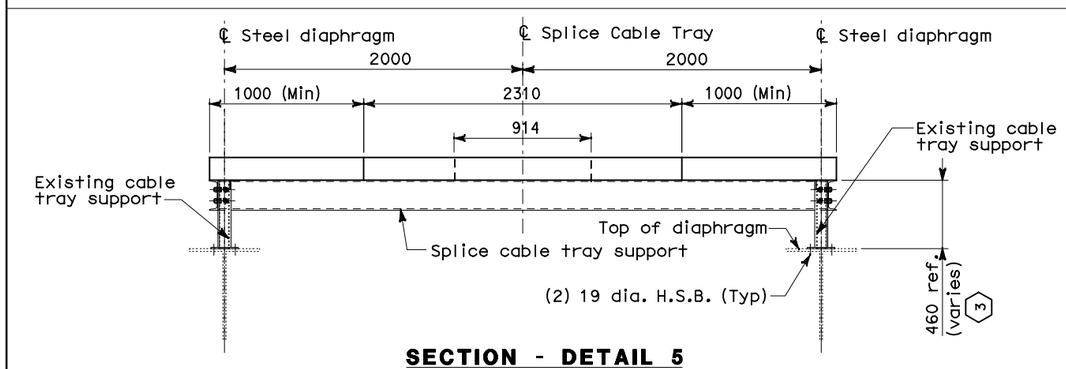

SECTION - DETAIL 5

Splice Cable Tray Support on T-Stiffener Diaphragms
Refer to AS-21 for structural details

THIS PLAN ACCURATE FOR ELECTRICAL WORK ONLY.

TABLE A		
15 kV Splice Cable Tray Conduit Schedule		
Location	LFMC-A	LFMC-B
Sta 62 + 27 (Hinge AE)	7492A	7492B
Sta 68 + 27 (Hinge BE)	2544A	2544B
Sta 74 + 68 (Hinge CE)	2593A	2593B
Sta 80 + 63 (Hinge DE)	7926A	7926B
Sta 82 + 51 (Hinge EE)	7681	-
TOS/COM Splice Cable Tray Conduit Schedule		
Location	LFMC-A	LFMC-B
Sta 62 + 27 (Hinge AE)	7476A	7476B
Sta 63 + 19 (Service Platform #9E)	5852A	5852B
Sta 64 + 73 (Service Platform #10E)	5862A	5862B
Sta 66 + 27 (Service Platform #11E)	5872A	5872B
Sta 67 + 91 (Service Platform #12E)	5882A	5882B
Sta 69 + 47 (Service Platform #13E)	5891A	5891B
Sta 72 + 68 (Service Platform #15E)	5912A	5912B
Sta 74 + 28 (Service Platform #16E)	5922A	5922B
Sta 75 + 88 (Service Platform #17E)	5932A	5932B
Sta 77 + 48 (Service Platform #18E)	5942A	5942B
Sta 80 + 36 (Service Platform #20E)	5962A	5962B
Sta 81 + 55 (Service Platform #21E)	5972A	5972B
Sta 82 + 51 (Hinge EE)	7676A	7676B

DIST	COUNTY	ROUTE	KILOMETER POST TOTAL PROJECT	SHEET No	TOTAL SHEETS
04	SF, Ala	80	12.2/14.3 0.0/4.0	407a 08S40	1204

Syn Yee Chin 03/08/10
REGISTERED ELECTRICAL ENGINEER DATE

05-06-2010
PLANS APPROVAL DATE

REGISTERED PROFESSIONAL ENGINEER SYN YEE CHIN No. 18186 Exp. 09/30/2011 ELECTRICAL STATE OF CALIFORNIA

PB AMERICAS, Inc.
A Parsons Brinckerhoff Company
303 Second St., Suite 700N
San Francisco, CA 94107-1317

The State of California or its officers or agents shall not be responsible for the accuracy or completeness of electronic copies of this plan sheet.

Caltrans now has a web site! To get to the web site, go to http://www.dot.ca.gov

NOTES:

1. For fiber optic splice detail, see sheet E-972.

SHEET NOTES:

1. Minimum cable bend radius shall be 12 times the diameter of the cable. Provide 6.5 meter cable slack per phase. For shield grounding see sheet E-836A, Detail 3.
2. The 15 kV cable splice shall not project above the cable tray side rails. Locate splice at near mid-point of coiled cable.
3. Contractor to verify dimensions and make adjustment to the support to suit field condition as required.
4. Cable tray bonding jumper assembly shall be Cooper B-Line Catalog #99-40 or approved equal. Mounting hardware shall be hot dipped galvanized steel, ribbed neck carriage bolt, serrated flange hex nut, flat and lock washers.
5. See Table A for conduit location and designation number.

REQUEST FOR INFORMATION NOT ADDRESSED IN THIS CCO REMAIN IN FORCE

MARK	DATE	DESCRIPTIONS	BY	CH'D	CCO#
0	03/08/10	MEP INTEGRATION	RG SYC	FW	110

REVISIONS

CONTRACT CHANGE ORDER NO._____
SHEET_____ OF _____

DETAILS
BRIDGE STRUCTURES GIRDER EASTBOUND GIRDER TYPICAL DETAILS

NO SCALE

E-836

ALL DIMENSIONS ARE IN MILLIMETERS UNLESS OTHERWISE SHOWN

DATE	REVISED BY	CALCULATED/ DESIGNED BY	DESIGN OVERSIGHT
01/10	01/10	SYC	BEHZAD GOLEMOHAMMADI
DATE REVISED		CHECKED BY	FW

STATE OF CALIFORNIA - DEPARTMENT OF TRANSPORTATION

LAST REVISION 00-00-00 DATE PLOTTED => 06-MAY-2010 TIME PLOTTED => 18:26

FOR REDUCED PLANS ORIGINAL SCALE IS IN MILLIMETERS 0 20 40 60 80

DGN FILE =>04-0120f1_E-836.dgn
USERNAME =>llorico

CU 04251 EA 0120F1