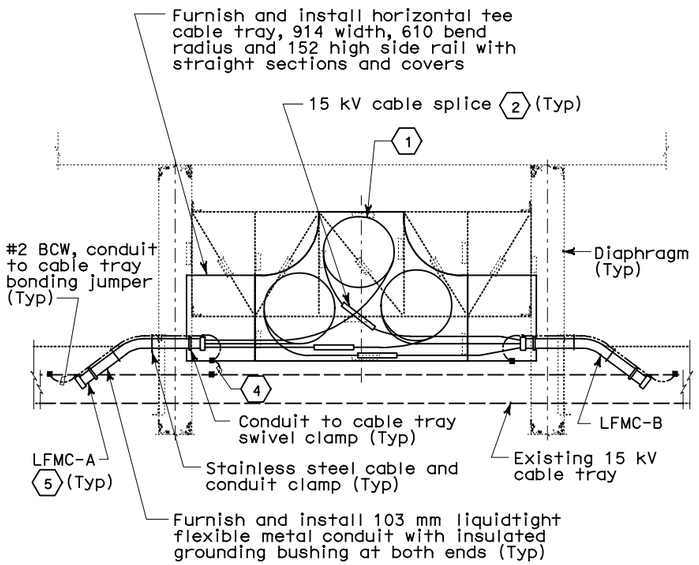

PLAN - DETAIL 1

15 kV Splice Cable Tray installation between diaphragms

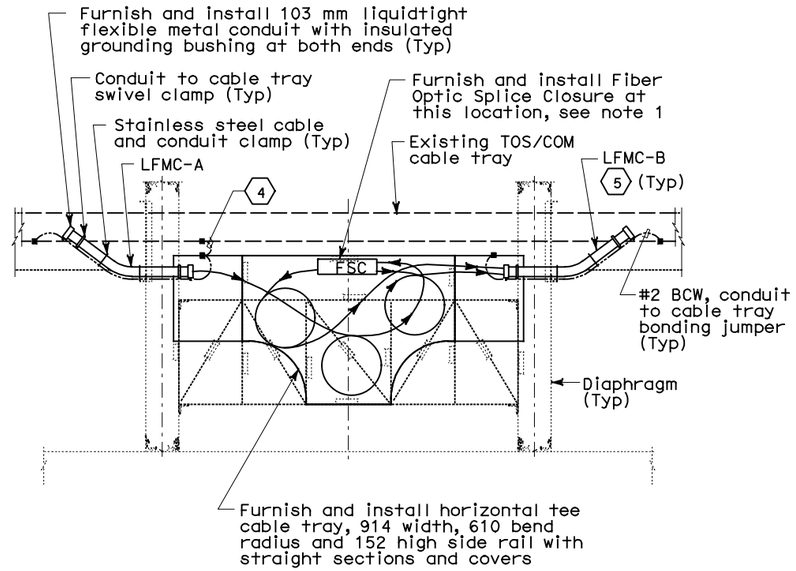

PLAN - DETAIL 2

TOS/COM Splice Cable Tray installation between diaphragms

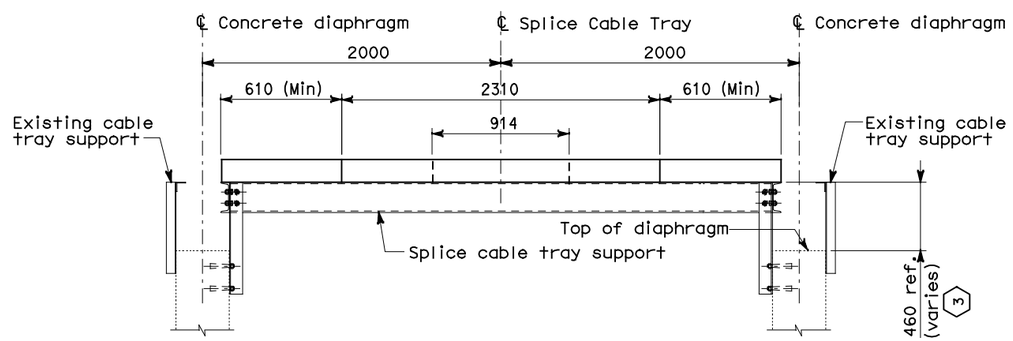

SECTION - DETAIL 4

Splice Cable Tray Support on Concrete Diaphragms
Refer to AS-20 for structural details

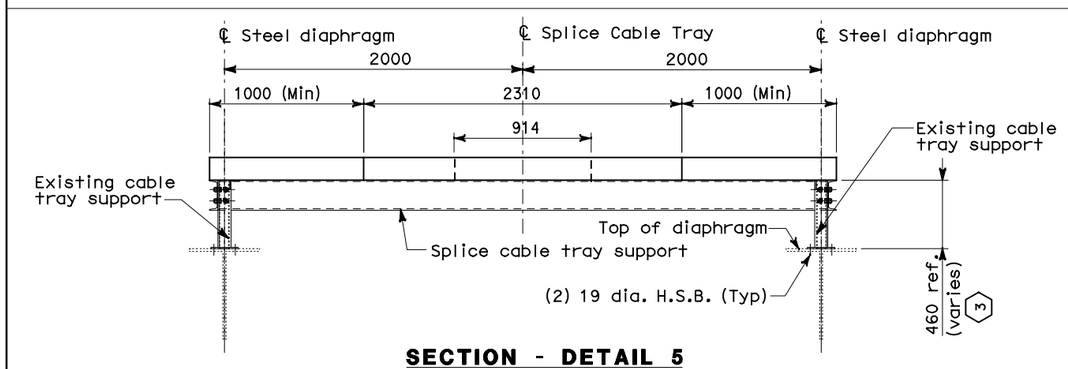

SECTION - DETAIL 5

Splice Cable Tray Support on T-Stiffener Diaphragms
Refer to AS-21 for structural details

THIS PLAN ACCURATE FOR ELECTRICAL WORK ONLY.

DIST	COUNTY	ROUTE	KILOMETER POST TOTAL PROJECT	SHEET No	TOTAL SHEETS
04	SF, Ala	80	12.2/14.3 0.0/4.0	407a 06S64	1204

Syn Yee Chin 03/08/10
REGISTERED ELECTRICAL ENGINEER DATE

PLANS APPROVAL DATE

REGISTERED PROFESSIONAL ENGINEER SYN YEE CHIN No. 18186 Exp. 09/30/2011 ELECTRICAL STATE OF CALIFORNIA

PB AMERICAS, Inc.
A Parsons Brinckerhoff Company
303 Second St., Suite 700N
San Francisco, CA 94107-1317

The State of California or its officers or agents shall not be responsible for the accuracy or completeness of electronic copies of this plan sheet.

Caltrans now has a web site! To get to the web site, go to http://www.dot.ca.gov

NOTES:

1. For fiber optic splice detail, see sheet E-972.

SHEET NOTES:

(1) Minimum cable bend radius shall be 12 times the diameter of the cable. Provide 6.5 meter cable slack per phase. For shield grounding see sheet E-663A, Detail 6.

(2) The 15 kV cable splice shall not project above the cable tray side rails. Locate splice at near mid-point of coiled cable.

(3) Contractor to verify dimensions and make adjustment to the support to suit field condition as required.

(4) Cable tray bonding jumper assembly shall be Cooper B-Line Catalog #99-40 or approved equal. Mounting hardware shall be hot dipped galvanized steel, ribbed neck carriage bolt, serrated flange hex nut, flat and lock washers.

(5) See Table A for conduit location and designation number.

TABLE A

15 kV Splice Cable Tray Conduit Schedule

Location	LFMC-A	LFMC-B
Sta 62 + 38 (Hinge AW)	6502A	6502B
Sta 68 + 58 (Hinge BW)	6530A	6530B
Sta 74 + 95 (Hinge CW)	6586A	6586B
Sta 80 + 91 (Hinge DW)	6642A	6642B
Sta 82 + 87 (Hinge EW)	6936	-

TOS/COM Splice Cable Tray Conduit Schedule

Location	LFMC-A	LFMC-B
Sta 62 + 38 (Hinge AW)	6523A	6523B
Sta 62 + 50 (Hinge AW)	6523C	6523D
Sta 63 + 07 (Service Platform #9W)	4852A	4852B
Sta 64 + 67 (Service Platform #10W)	4862A	4862B
Sta 66 + 27 (Service Platform #11W)	4872A	4872B
Sta 67 + 91 (Service Platform #12W)	4881A	4881B
Sta 69 + 47 (Service Platform #13W)	4982A	4982B
Sta 72 + 67 (Service Platform #15W)	4912A	4912B
Sta 74 + 31 (Service Platform #16W)	4922A	4922B
Sta 75 + 86 (Service Platform #17W)	4931A	4931B
Sta 77 + 47 (Service Platform #18W)	4942A	4942B
Sta 80 + 39 (Service Platform #20W)	4962A	4962B
Sta 81 + 55 (Service Platform #21W)	4972A	4972B
Sta 82 + 79 (Hinge EW)	6973A	6973B
Sta 82 + 87 (Hinge EW)	6972A	6972B

REQUEST FOR INFORMATION NOT ADDRESSED IN THIS CCO REMAIN IN FORCE

MARK	DATE	DESCRIPTIONS	BY	CH'D	CCO#
0	03/08/10	MEP INTEGRATION	RG SYC	FW	110

REVISIONS

CONTRACT CHANGE ORDER NO._____
SHEET _____ OF _____

DETAILS
BRIDGE STRUCTURES GIRDER WESTBOUND GIRDER TYPICAL DETAILS

NO SCALE

ALL DIMENSIONS ARE IN MILLIMETERS UNLESS OTHERWISE SHOWN

E-663

100% SUBMITTAL (03/08/2010)
STATE OF CALIFORNIA - DEPARTMENT OF TRANSPORTATION
Caltrans

DESIGN OVERSIGHT: BEHZAD GOLEMOHAMMADI

CALCULATED/DESIGNED BY: SYC | DATE 01/10 | REVISED BY
CHECKED BY: FW | 01/10 | DATE REVISED

LAST REVISION 00-00-00 | DATE PLOTTED => 06-MAY-2010 | TIME PLOTTED => 18:09

FOR REDUCED PLANS ORIGINAL SCALE IS IN MILLIMETERS 0 20 40 60 80

DGN FILE =>04-0120f1_E-663.dgn
USERNAME =>llorico

CU 04251 | EA 0120F1