DIST	COUNTY	ROUTE	KILOMETER POST TOTAL PROJECT	SHEET No	TOTAL SHEETS
04	SF,Ala	80	12.2/14.3 0.0/4.0	86 S23	1204

REGISTERED CIVIL ENGINEER 03/08/10 DATE

05-06-2010
PLANS APPROVAL DATE

REGISTERED PROFESSIONAL ENGINEER Mee Shing Owyang No. 24960 Exp. 12/31/11 CIVIL STATE OF CALIFORNIA

PB AMERICAS, Inc.
A Parsons Brinckerhoff Company
303 Second St., Suite 700N
San Francisco, CA 94107-1317

The State of California or its officers or agents shall not be responsible for the accuracy or completeness of electronic copies of this plan sheet.

Caltrans now has a web site! To get to the web site, go to http://www.dot.ca.gov

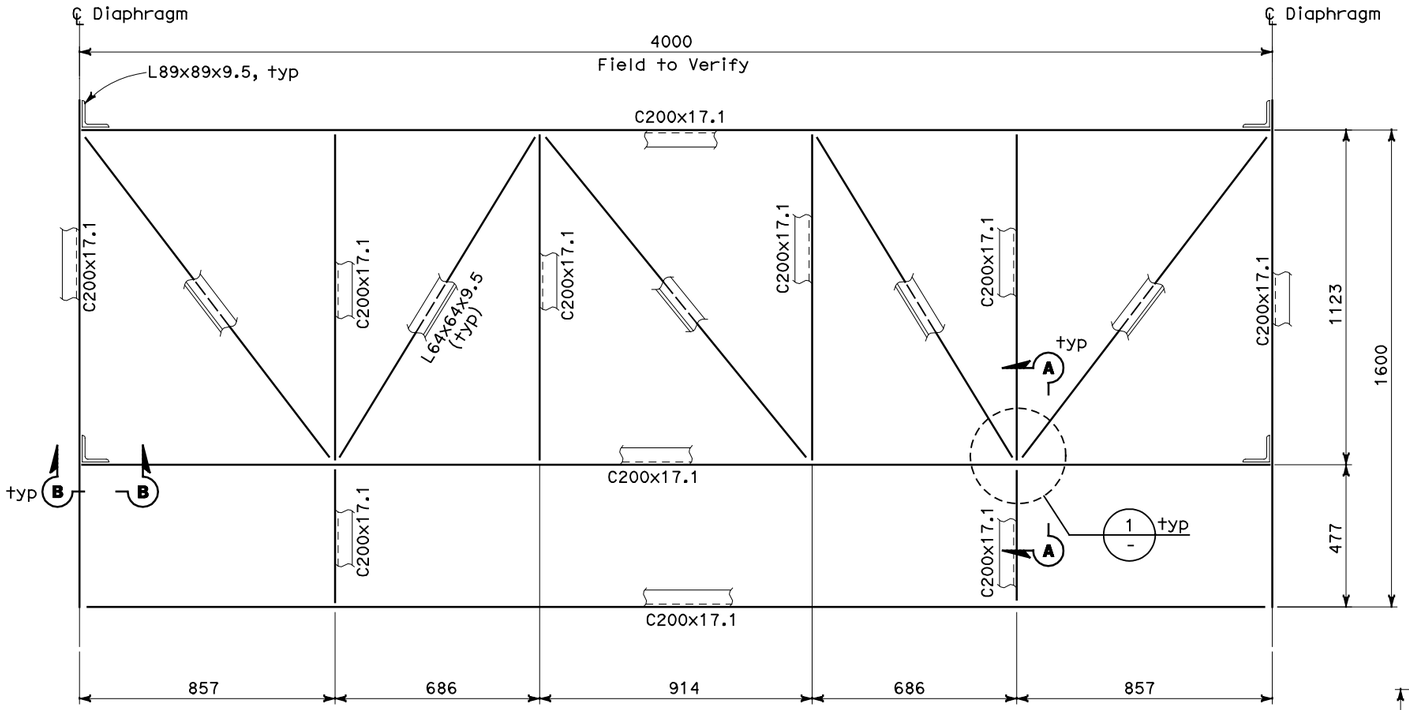

TYPE ~~XX~~

PLAN
SCALE: 1:10

NOTES:

1. Structural steel - ASTM A36.
2. High strength steel bolts - ASTM A325.
3. Concrete anchors - anchor bodies shall be zinc plated in accordance w/ ASTM B633, SC1, Type 1. The expansion clip is fabricated from ASTM A240, Grade 316 stainless steel. The washer conforms to ASTM F844. The hex nut conforms to ASTM A563, Grade A.
4. Electrodes - AWS A5.1, E70XX.
5. All structural steel shall be Hot-dip galvanized after fabrication.

REQUEST FOR INFORMATION NOT ADDRESSED IN THIS CCO REMAIN IN FORCE

MARK	DATE	DESCRIPTIONS	BY	CH'D	CCO#
0	03/08/10	MEP INTEGRATION	RG	MSO	110

REVISIONS

CONTRACT CHANGE ORDER NO._____
SHEET _____ OF _____

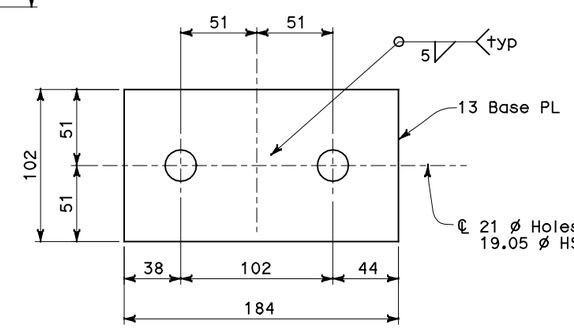

SECTION C
SCALE: 1:2

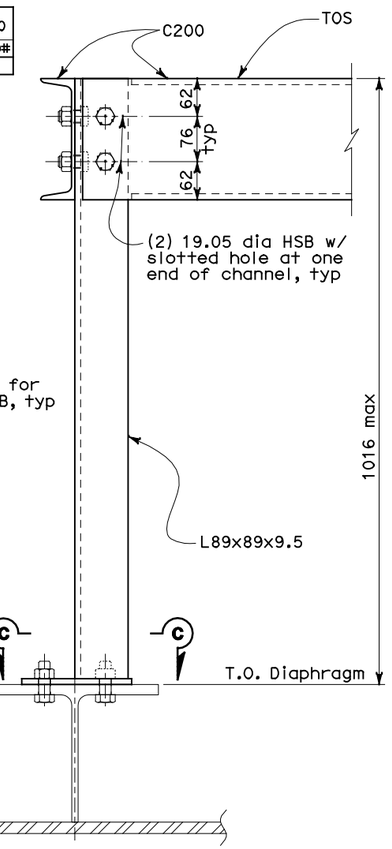

SECTION B
SCALE: 1:5

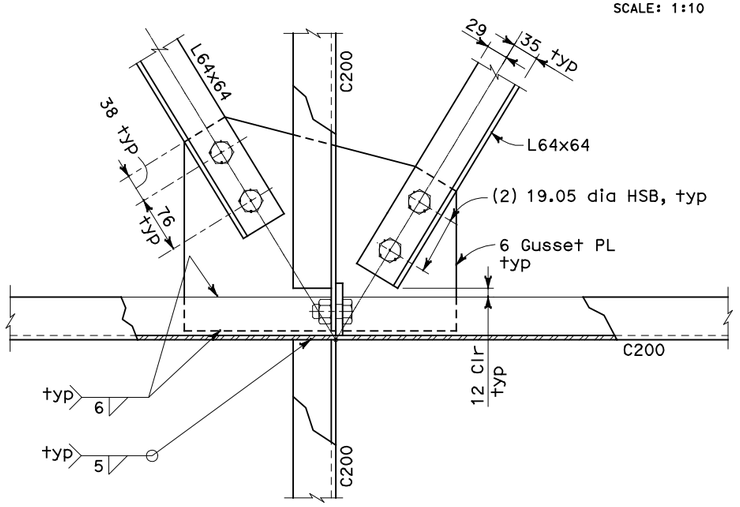

TYP BRACING CONNECTION

DETAIL 1
SCALE: 1:4

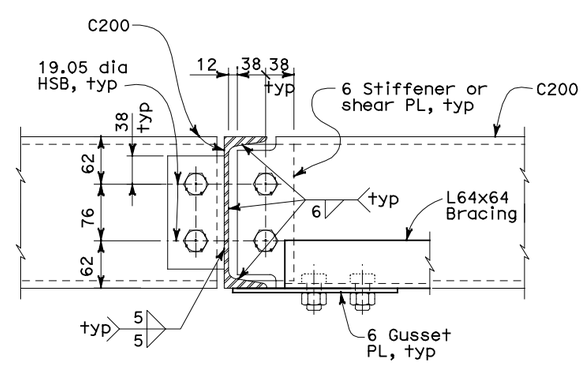

TYP CHANNEL TO CHANNEL CONNECTION

SECTION A
SCALE: 1:4

ALL DIMENSIONS ARE IN MILLIMETERS UNLESS OTHERWISE SHOWN

Bob Zandipour DESIGN OVERSIGHT	DESIGN	BY M. S. OWYANG	CHECKED R. Garcia	PREPARED FOR THE STATE OF CALIFORNIA DEPARTMENT OF TRANSPORTATION	Brady Nadell PROJECT ENGINEER
SIGN OFF DATE	DETAILS	BY E. CANTILLER	CHECKED		
	QUANTITIES	BY	CHECKED		

BRIDGE NO. 34-0006
KILOMETER POST SF 12.2/ ALA 4.0

SKYWAY STRUCTURE
SPLICE CABLE TRAY SUPPORT-TYPE II AS-21

DESIGN DETAIL SHEET (METRIC) (REV. 3/1/98)

ORIGINAL SCALE IN MILLIMETERS FOR REDUCED PLANS 0 10 20 30 40 50 60 70 80 90 100

CU 04251
EA 0120F1

DISREGARD PRINTS BEARING EARLIER REVISION DATES

REVISION DATES (PRELIMINARY STAGE ONLY) SHEET OF

FILE => 04-0120f1_086S23.dgn

USERNAME => llorico DATE PLOTTED => 06-MAY-2010 TIME PLOTTED => 19:49