DIST	COUNTY	ROUTE	KILOMETER POST TOTAL PROJECT	SHEET No	TOTAL SHEETS
04	SF,Ala	80	12.2/14.3 0.0/4.0	86 S22	1204

REGISTERED CIVIL ENGINEER — DATE 03/08/10

05-06-2010
PLANS APPROVAL DATE

REGISTERED PROFESSIONAL ENGINEER — Mee Shing Owyang — No. 24960 — Exp. 12/31/11 — CIVIL — STATE OF CALIFORNIA

PB AMERICAS, Inc.
A Parsons Brinckerhoff Company
303 Second St., Suite 700N
San Francisco, CA 94107-1317

The State of California or its officers or agents shall not be responsible for the accuracy or completeness of electronic copies of this plan sheet.

Caltrans now has a web site! To get to the web site, go to http://www.dot.ca.gov

Caltrans Metric

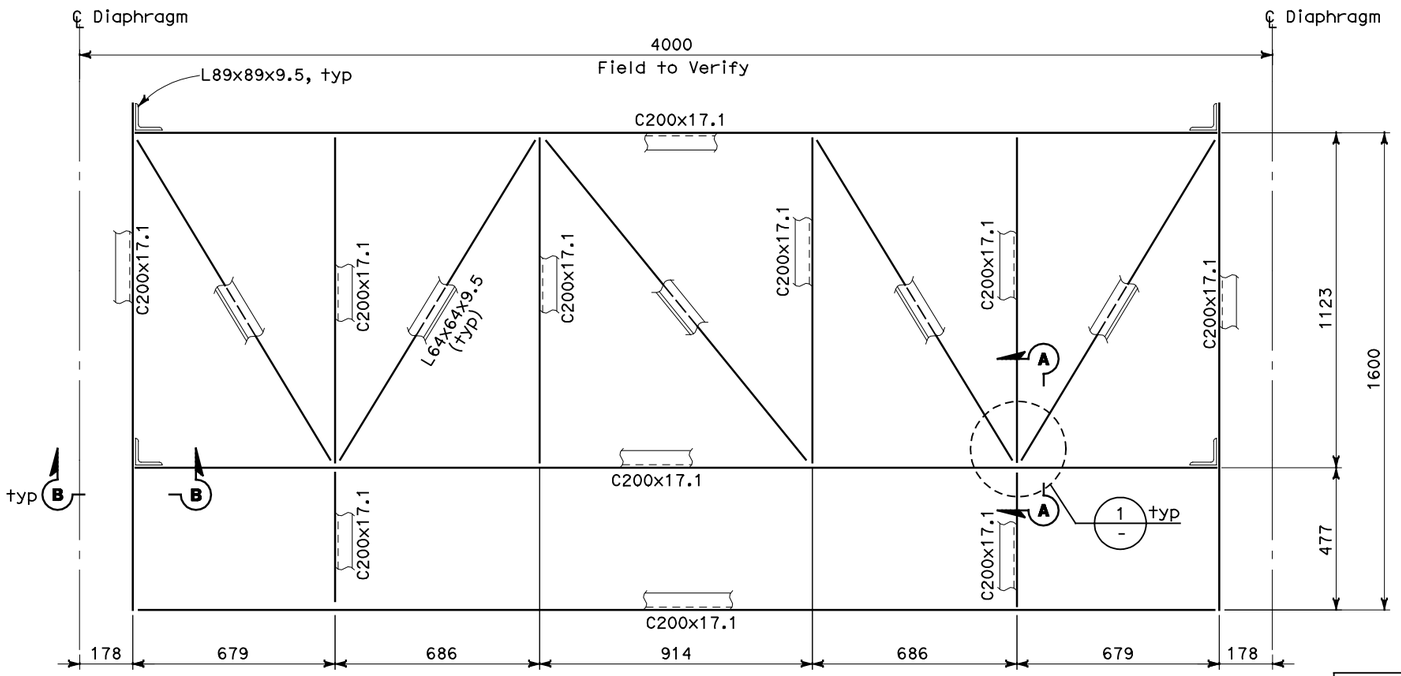

NOTES:

1. Structural steel - ASTM A36.
2. High strength steel bolts - ASTM A325.
3. Concrete anchors - anchor bodies shall be zinc plated in accordance w/ ASTM B633, SC1, Type 1. The expansion clip is fabricated from ASTM A240, Grade 316 stainless steel. The washer conforms to ASTM F844. The hex nut conforms to ASTM A563, Grade A.
4. Electrodes - AWS A5.1, E70XX.
5. All structural steel shall be Hot-dip galvanized after fabrication.

REQUEST FOR INFORMATION NOT ADDRESSED IN THIS CCO REMAIN IN FORCE

MARK	DATE	DESCRIPTIONS	BY	CH'D	CCO#
0	03/08/10	MEP INTEGRATION	RG	MSO	110

REVISIONS

CONTRACT CHANGE ORDER NO._____
SHEET _____ OF _____

TYPE *

PLAN
SCALE: 1:10

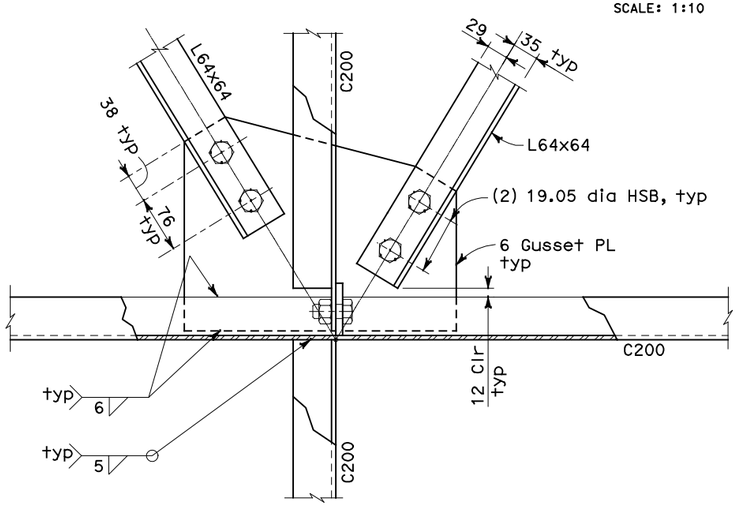

TYP BRACING CONNECTION

DETAIL 1
SCALE: 1:4

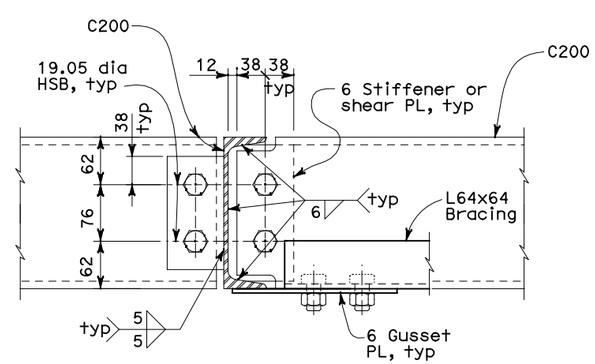

TYP CHANNEL TO CHANNEL CONNECTION

SECTION A
SCALE: 1:4

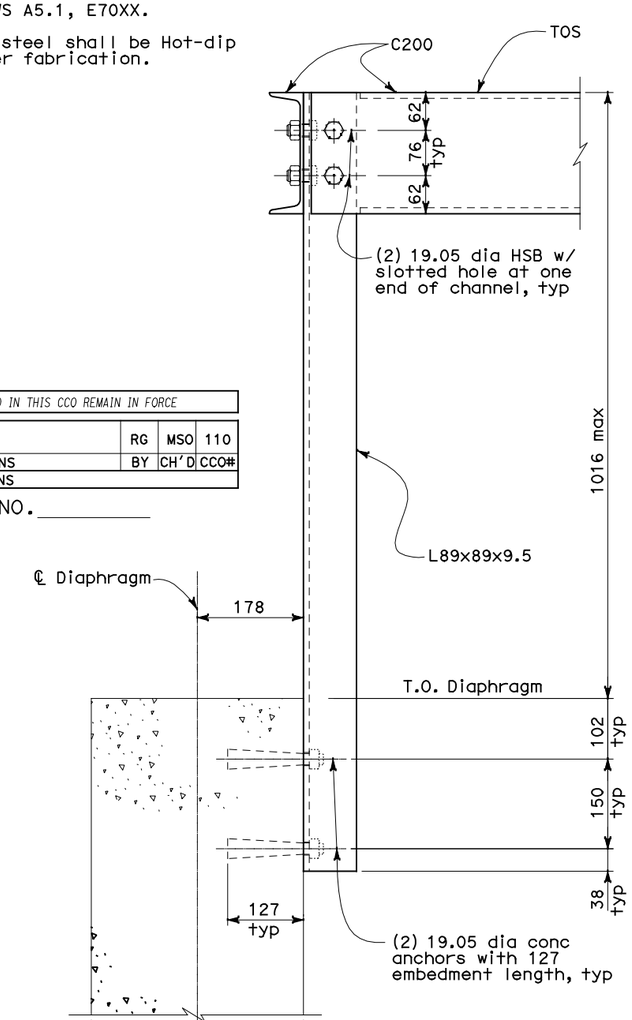

SECTION B
SCALE: 1:5

ALL DIMENSIONS ARE IN MILLIMETERS UNLESS OTHERWISE SHOWN

Bob Zandipour DESIGN OVERSIGHT	DESIGN	BY M. S. OWYANG	CHECKED R. Garcia
	DETAILS	BY E. CANTILLER	CHECKED
SIGN OFF DATE	QUANTITIES	BY	CHECKED

PREPARED FOR THE STATE OF CALIFORNIA DEPARTMENT OF TRANSPORTATION

Brady Nadell
PROJECT ENGINEER

BRIDGE NO. 34-0006
KILOMETER POST SF 12.2/ ALA 4.0

SKYWAY STRUCTURE
SPLICE CABLE TRAY SUPPORT-TYPE I

AS-20

DESIGN DETAIL SHEET (METRIC) (REV. 3/1/98)

ORIGINAL SCALE IN MILLIMETERS FOR REDUCED PLANS 0 10 20 30 40 50 60 70 80 90 100

CU 04251
EA 0120F1

DISREGARD PRINTS BEARING EARLIER REVISION DATES

REVISION DATES (PRELIMINARY STAGE ONLY) — SHEET — OF

FILE => 04-0120f1_086S22.dgn

USERNAME => llorico DATE PLOTTED => 06-MAY-2010 TIME PLOTTED => 13:48