DIST.	COUNTY	ROUTE	KILOMETER POST TOTAL PROJECT	SHEET NO.	TOTAL SHEETS
04	SF	80	13.2/13.9	860S1	1204

Caltrans Metric

REGISTERED ENGINEER - CIVIL

06-19-09

PLANS APPROVAL DATE

REGISTERED PROFESSIONAL ENGINEER Brian Maroney No. 39754 Exp. 12/31/09 CIVIL STATE OF CALIFORNIA

The State of California or its officers or agents shall not be responsible for the accuracy or completeness of electronic copies of this plan sheet.

T.Y. LIN / MOFFATT & NICHOL
825 BATTERY STREET
SAN FRANCISCO, CA 94111

Caltrans now has a web site! To get to the web site, go to: http://www.dot.ca.gov

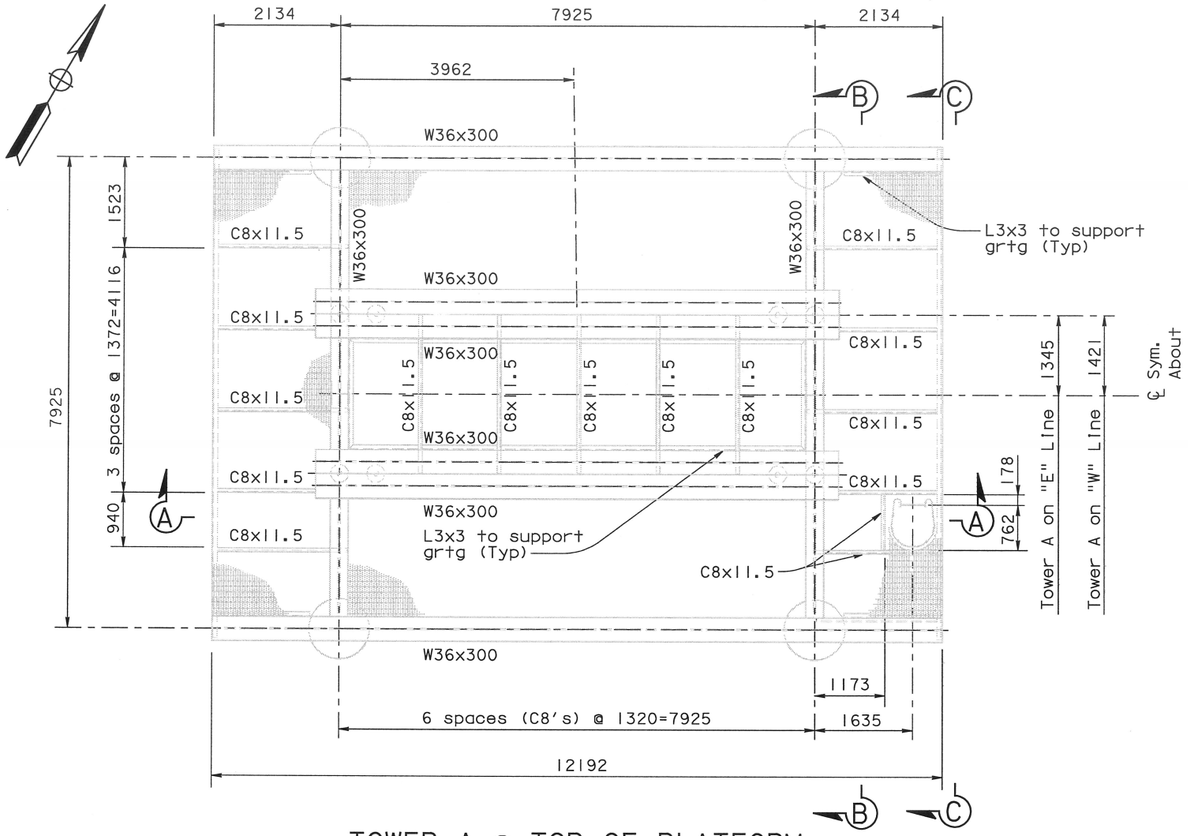

TOWER A @ TOP OF PLATFORM
1:50

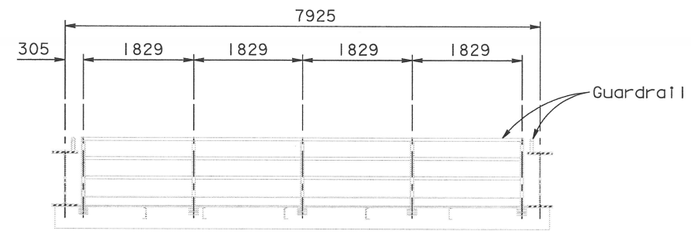

SECTION C-C
1:50

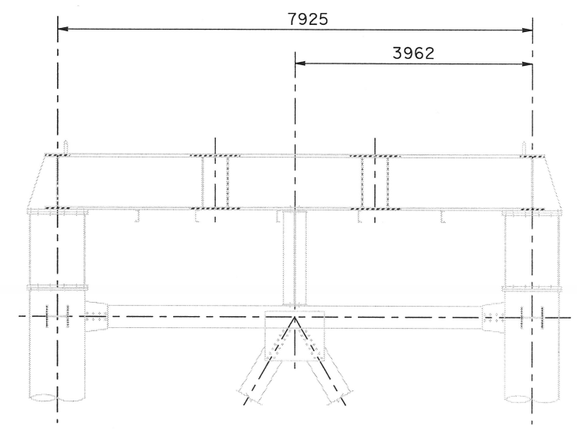

SECTION B-B
1:50

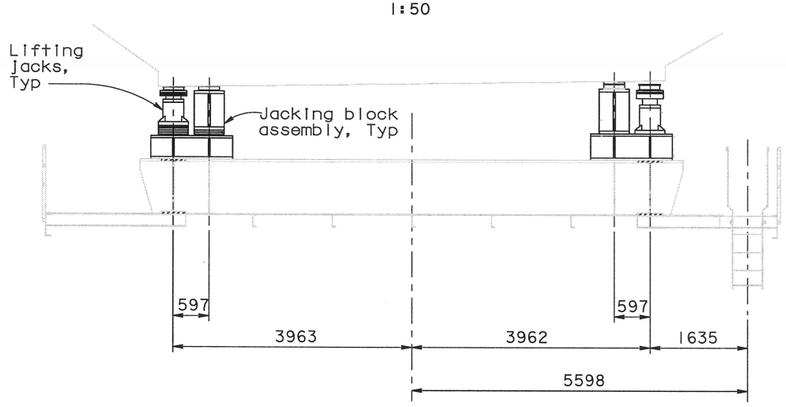

SECTION A-A
1:50

NOTES:

1. Westbound shown; Eastbound similar.
2. All dimensions are approximate and shall be verified in the field.
3. All steel shall be ASTM A36 or better unless otherwise approved by the Engineer.

CONTRACT CHANGE ORDER NO. _____
SHEET ____ OF ____

REQUESTS FOR INFORMATION NOT ADDRESSED IN THIS CCO REMAIN IN FORCE

ALL DIMENSIONS ARE IN MILLIMETERS UNLESS OTHERWISE SHOWN

MARK	DATE	DESCRIPTIONS	BY	CH'D	CCO#
0	06/19/09	SKYWAY OBG LOWERING NEAR HINGE A	JAD	AA	106

REVISIONS

R. Valizadeh/V. Toan/Y. L./W. L./F. C.
DESIGN OVERSIGHT

SIGN OFF DATE 06/19/09

Rev. Date: 5-18-98

DESIGN	BY J. Denis	CHECKED	A. Akinsanya
DETAILS	BY J. Denis	CHECKED	A. Akinsanya
QUANTITIES	BY J. Duxbury	CHECKED	A. Akinsanya

PREPARED FOR THE STATE OF CALIFORNIA DEPARTMENT OF TRANSPORTATION

B. Maroney
PROJECT ENGINEER

BRIDGE NO. 34-0006L/R
KILOMETER POST 13.2/13.9

SAN FRANCISCO OAKLAND BAY BRIDGE
EAST SPAN SEISMIC SAFETY PROJECT
SELF-ANCHORED SUSPENSION BRIDGE
(SUPERSTRUCTURE & TOWER)

SKYWAY OBG LOWERING NEAR HINGE A NO. 1

ORIGINAL SCALE IN MILLIMETERS FOR REDUCED PLANS 0 10 20 30 40 50 60 70 80 90 100

CU 04
EA 0120F1

DISREGARD PRINTS BEARING EARLIER REVISION DATES 06/19/09

REVISION DATES (PRELIMINARY STAGE ONLY)

SHEET 443S1 OF

FILE => I:\bb\04-0120I\sas\contract plans and cco\cco\cco#106\3-original 06-19-09\dgn\cco106plan.dgn

100 % PS&E

USERNAME => oltshansk DATE PLOTTED => 19 JUN 2009 TIME PLOTTED => 08:58