CONTRACT CHANGE ORDER

Change Requested by: Engineer

CCO: 106 **Suppl. No. 0** **Contract No. 04 – 0120F4** **Road** SF-80-13.2/13.9 **FED. AID LOC.:**

To: **AMERICAN BRIDGE/FLUOR ENTERPRISES INC A JOINT VENTURE**

You are directed to make the following changes from the plans and specifications or do the following described work not included in the plans and specifications for this contract. ***NOTE: This change order is not effective until approved by the Engineer.***

De. ,tion of work to be done, estimate of quantities and prices to be paid. (Segregate between additional work at contract price, agreed price and force account.) Unless otherwise stated, rates for rental of equipment cover only such time as equipment is actually used and no allowance will be made for idle time. This last percentage shown is the net accumulated increase or decrease from the original quantity in the Engineer's Estimate.

Extra Work at Force Account:

In addition to lowering and measuring Hinge A reaction as required under Section 10-1.59, "STEEL STRUCTURES," subsection, "ERECTION PLAN," of the Special Provisions and Contract plan Sheet 982 (of 1204), perform extra work per the attached supplemental plan sheets 860S1, 860S2, 860S3, 860S4, 860S5 and 860S6 (of 1204) and as directed by the Engineer. Extra work includes, but is not limited to the following:

- Modifying existing lateral supports (shear keys) and the shim stack/blocking supports on the existing temporary towers near Hinge A of the existing Skyway structures.
- Performing additional measurements at Hinge A.

Labor, equipment and material approved by the Engineer, as necessary will be paid in accordance with the provisions of Section 4-1.03D, "Extra Work" of the Standard Specifications and Section 5-1.24, "Force Account Payment" of the Special Provisions.

;timated cost of Extra Work at Force Account $500,000.00

Estimated Cost: **Increase** ☒ **Decrease** ☐ **$500,000.00**

By reason of this order the time of completion will be adjusted as follows: **0 Days**

Submitted by

Signature **Resident Engineer** Brian Boal for Gary Pursell, Sup.T.E. **Date** 6/30/09

Approval Recommended by

Signature **Supervising Bridge Engineer** Richard Morrow, Sup.T.E. **Date** 6/30/09

Engineer Approval by

Signature **Supervising Transportation Engineer** Gary Pursell for Peter Siegenthaler, Prin.T.E. **Date** 7/13/09

We the undersigned contractor, have given careful consideration to the change proposed and agree, if this proposal is approved, that we will provide all equipment, furnish the materials, except as otherwise be noted above, and perform all services necessary for the work above specified, and will accept as full payment therefor the prices shown above.

NOTE: If you, the contractor, do not sign acceptance of this order, your attention is directed to the requirements of the specifications as to proceeding with the ordered work and filing a written protest within the time therein specified.

Contractor Acceptance by

Signature (Print name and title) Michael D. Flowers Project Director **Date** 7-9-09

TOWER A @ TOP OF PLATFORM
1:50

SECTION A-A
1:50

SECTION C-C
1:50

SECTION B-B
1:50

NOTES:
1. Westbound shown; Eastbound similar.
2. All dimensions are approximate and shall be verified in the field.
3. All steel shall be ASTM A36 or better unless otherwise approved by the Engineer.

CONTRACT CHANGE ORDER NO. ____
SHEET ____ OF ____

REQUESTS FOR INFORMATION NOT ADDRESSED IN THIS CCO REMAIN IN FORCE

ALL DIMENSIONS ARE IN MILLIMETERS UNLESS OTHERWISE SHOWN

DIST	COUNTY	ROUTE	KILOMETER POST TOTAL PROJECT	SHEET NO.	TOTAL SHEETS
04	SF	80	13.2/13.9	860SI	1204

Caltrans Metric

REGISTERED ENGINEER - CIVIL
06-19-09
PLANS APPROVAL DATE
The State of California or its officers or agents shall not be responsible for the accuracy or completeness of electronic copies of this plan sheet.

REGISTERED PROFESSIONAL ENGINEER Brian Maroney No. 39754 Exp. 12/31/09 CIVIL STATE OF CALIFORNIA

T.Y. LIN / MOFFATT & NICHOL
825 BATTERY STREET
SAN FRANCISCO, CA 94111

Caltrans now has a web site! To get to the web site, go to: http://www.dot.ca.gov

MARK	DATE	DESCRIPTIONS	BY	CH'D	CCO*
△	06/19/09	SKYWAY OBG LOWERING NEAR HINGE A	JAD	AA	106
		REVISIONS			

R. Valizadeh/V. Toan/Y.L./W.L./F.C.
DESIGN OVERSIGHT
SIGN OFF DATE 06/19/09
Rev. Date: 5-18-98

	BY	CHECKED
DESIGN	J. Denis	A. Akinsanya
DETAILS	J. Denis	A. Akinsanya
QUANTITIES	J. Duxbury	A. Akinsanya

PREPARED FOR THE STATE OF CALIFORNIA
DEPARTMENT OF TRANSPORTATION

B. Maroney
PROJECT ENGINEER

BRIDGE NO. 34-0006L/R
KILOMETER POST 13.2/13.9

SAN FRANCISCO OAKLAND BAY BRIDGE
EAST SPAN SEISMIC SAFETY PROJECT
SELF-ANCHORED SUSPENSION BRIDGE
(SUPERSTRUCTURE & TOWER)

SKYWAY OBG LOWERING NEAR HINGE A NO. 1

ORIGINAL SCALE IN MILLIMETERS FOR REDUCED PLANS 0 10 20 30 40 50 60 70 80 90 100

CU 04
EA 0120F1

DISREGARD PRINTS BEARING EARLIER REVISION DATES 06/19/09

REVISION DATES (PRELIMINARY STAGE ONLY)

SHEET 443SI OF

FILE => I:\bb\04-0120F1\sas\contract plans and cco\cco\cco#106\3-original 06-19-09\dgn\cco106plan.dgn

100 % PS&E

USERNAME => atlinanaxDATE PLOTTED => 19 JUN 2009B JUN 2009E PLOTTED

DIST.	COUNTY	ROUTE	KILOMETER POST TOTAL PROJECT	SHEET NO.	TOTAL SHEETS
04	SF	80	13.2/13.9	860S2	1204

REGISTERED ENGINEER - CIVIL

06-19-09

PLANS APPROVAL DATE

REGISTERED PROFESSIONAL ENGINEER Brian Maroney No. 39754 Exp. 12/31/09 CIVIL STATE OF CALIFORNIA

The State of California or its officers or agents shall not be responsible for the accuracy or completeness of electronic copies of this plan sheet.

T.Y. LIN / MOFFATT & NICHOL
825 BATTERY STREET
SAN FRANCISCO, CA 94111

Caltrans now has a web site! To get to the web site, go to: http://www.dot.ca.gov

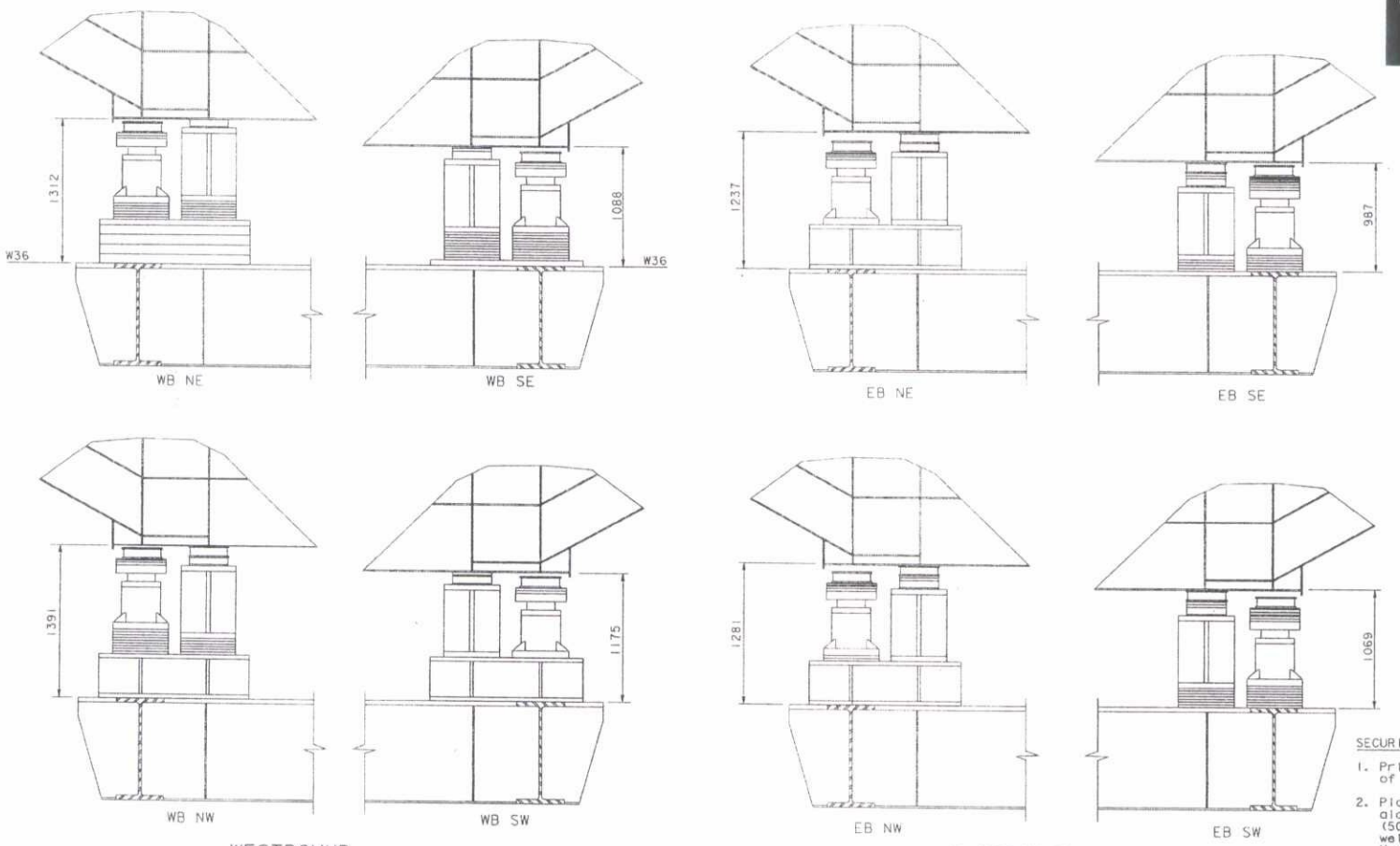

WESTBOUND

EXISTING CONDITIONS (Looking East)

1:20

EASTBOUND

EXISTING CONDITIONS (Looking East)

1:20

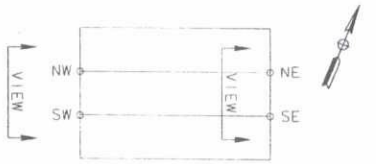

KEY PLAN

SECURING OF TRANSITION STRUCTURES VERTICALLY:

1. Prior to performing any work, determine the location of the longitudinal web plates and mark deck plate.
2. Place timber cribbing and locate concrete weights along the two web plates above jack locations (50 Tonnes total, each WB & EB). For concrete weight placing limits, see "Skyway OBG Lowering Near Hinge A No.6" sheet.
3. Remove any miscellaneous items that may interfere with lowering operation, i.e. handrails, etc.

NOTES:

1. All dimensions are approximate and shall be verified in the field.
2. Existing jacks shall be re-calibrated prior to using.

SURVEY OF AS-BUILT TRANSITION STRUCTURES PRIOR TO THE LOWERING OPERATION:

1. Survey, record and provide the Engineer the existing position (longitudinal, transverse and vertical) at the locations indicated on "Skyway OBG Lowering Near Hinge A No. 6" sheet.
2. Survey, summarize, record and provide the Engineer both longitudinal and cross slope of the Transition Structure.
3. Provide elevations and coordinates in the State Grid System for all surveyed points.

CONTRACT CHANGE ORDER NO. _____
SHEET ____ OF ____

REQUESTS FOR INFORMATION NOT ADDRESSED IN THIS CCO REMAIN IN FORCE

ALL DIMENSIONS ARE IN MILLIMETERS UNLESS OTHERWISE SHOWN

R. Valizadeh/V. Toan/Y.L./W.L./F.C.
DESIGN OVERSIGHT

SIGN OFF DATE 06/19/09

Rev. Date: 5-18-98

MARK	DATE	DESCRIPTIONS	BY	CH'D	CCO#
0	06/19/09	SKYWAY OBG LOWERING NEAR HINGE A	JAD	AA	106

REVISIONS

	BY	CHECKED
DESIGN	J. Denis	A. Akinsanya
DETAILS	J. Denis	A. Akinsanya
QUANTITIES	J. Duxbury	A. Akinsanya

PREPARED FOR THE STATE OF CALIFORNIA DEPARTMENT OF TRANSPORTATION

B. Maroney
PROJECT ENGINEER

BRIDGE NO. 34-0006L/R
KILOMETER POST 13.2/13.9

SAN FRANCISCO OAKLAND BAY BRIDGE
EAST SPAN SEISMIC SAFETY PROJECT
SELF-ANCHORED SUSPENSION BRIDGE
(SUPERSTRUCTURE & TOWER)

SKYWAY OBG LOWERING NEAR HINGE A NO. 2

ORIGINAL SCALE IN MILLIMETERS FOR REDUCED PLANS 0 10 20 30 40 50 60 70 80 90 100

CU 04
EA 0120F1

DISREGARD PRINTS BEARING EARLIER REVISION DATES

REVISION DATES (PRELIMINARY STAGE ONLY) 06/19/09

SHEET 443S2 OF

FILE => I:\bb\04-012001\sas\contract plans and cco\cco\cco#106\3-original 06-19-09\dgn\cco106shear.dgn

100 % PS&E

USERNAME => allshanek DATE PLOTTED => 19 JUN 2009 TIME PLOTTED => 10:59:32

MODIFICATION OF EXISTING SUPPORTS:

1. Secure the Hinge A Pipe Beams against lateral and longitudinal movement.
2. Activate three jacks and raise Transition Structure by 25 mm.
3. Switch out and reconfigure the jack and shim stack at the fourth location. Activate lock rings on the jack when re-configuring the support.
4. Lower the box girder back on the shim stacks.
5. Raise the fourth jack and lower one of the other three (not diagonal).
6. Repeat Steps (2) to (5) at the remaining locations. Do not re-configure a support diagonal from the previously completed.
7. The OBG (location Northing, Easting and Elevation) shall be surveyed at each jacking step and recorded.
8. The jack loads shall be recorded at each jacking step.

Lowering Procedure:

1. Jack the Transition Structure up by 25 mm clear of the shim packs, using the four jacks, pressurized equally; note the pressure at which each jack "lifts-off" the corresponding shim pack. Record the "lift-off" pressure in the jacks.
2. Remove one 100 mm support pan at each support.
3. Lower the Transition Structure very slowly, avoiding any impact, and set down onto supports. Resurvey the Transition Structure (at the locations indicated on "Skyway OBG Lowering Near Hinge A No. 6" sheet) to determine elevations, longitudinal and cross slopes.
4. Compress jacks and remove one 100 mm jack pan at each jack.
5. Repeat Steps 1 thru 4 until Transition Structure is at PGL.

Caltrans Metric

DIST.	COUNTY	ROUTE	KILOMETER POST TOTAL PROJECT	SHEET NO.	TOTAL SHEETS
04	SF	80	13.2/13.9	86053	1204

REGISTERED ENGINEER - CIVIL

06-19-09

PLANS APPROVAL DATE

REGISTERED PROFESSIONAL ENGINEER Brian Maroney No. 39754 Exp. 12/31/09 CIVIL STATE OF CALIFORNIA

The State of California or its officers or agents shall not be responsible for the accuracy or completeness of electronic copies of this plan sheet.

T.Y. LIN / MOFFATT & NICHOL
825 BATTERY STREET
SAN FRANCISCO, CA 94111

Caltrans now has a web site! To get to the web site, go to: http://www.dot.ca.gov

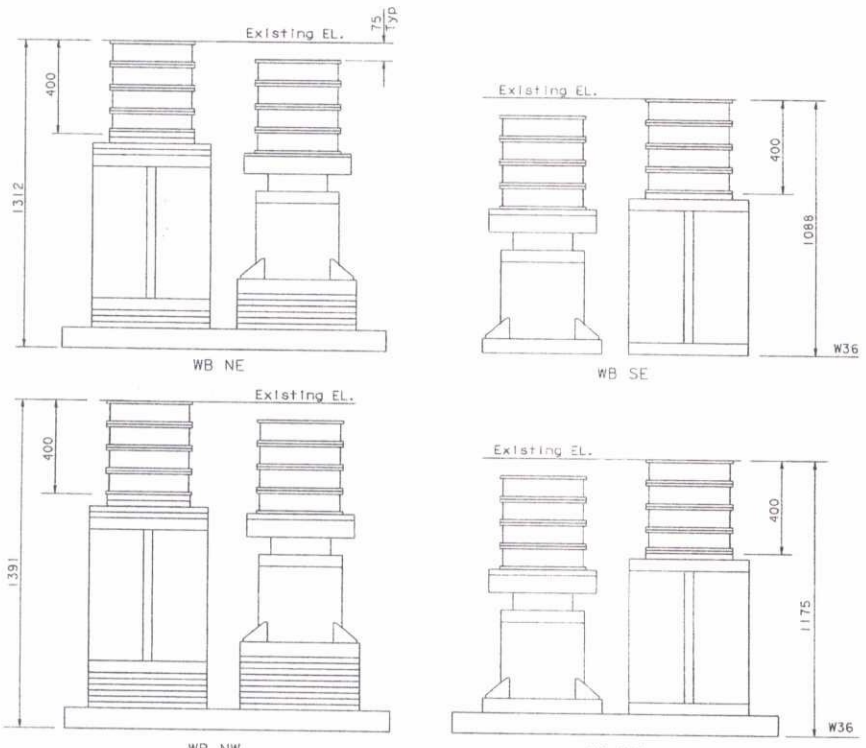

WESTBOUND
BEFORE LOWERING CONDITION (Looking East)
1:10

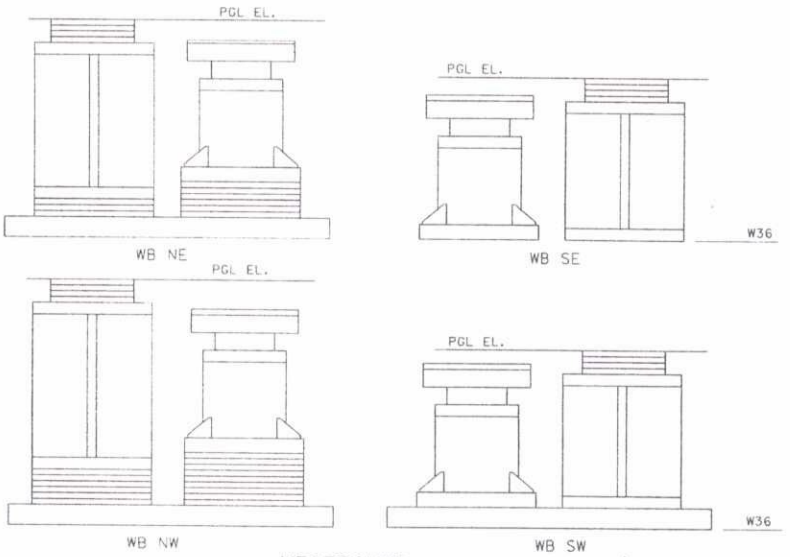

WESTBOUND
AFTER LOWERING CONDITION (Looking East)
1:10

NOTES:

1. All dimensions are approximate and shall be verified in the field.
2. To the extent possible, remove all equipment on the span at the time of the jacking operation, including trucks or other vehicles, construction materials, containers, etc. Note the presence or absence of railings, bike path, barriers, wearing surface, utilities, etc. Note the position of the secured pipe beams. Provide the Engineer with the location and magnitude of any such loads that cannot be removed.
3. The survey and jacking shall be completed before dawn, when structures are at uniform ambient temperature. Note the ambient and gradient temperatures in the Transition Structures when the lowering operations are performed. Note the wind speed.

CONTRACT CHANGE ORDER NO. ____
SHEET ____ OF ____

REQUESTS FOR INFORMATION NOT ADDRESSED IN THIS CCO REMAIN IN FORCE

ALL DIMENSIONS ARE IN MILLIMETERS UNLESS OTHERWISE SHOWN

R. Valizadeh/V. Toan/Y.L./W.L./F.C.
DESIGN OVERSIGHT
SIGN OFF DATE 06/19/09
Rev. Date: 5-18-98

MARK	DATE	DESCRIPTIONS	BY	CH'D	CCO#
0	06/19/09	SKYWAY OBG LOWERING NEAR HINGE A	JAD	AA	106

REVISIONS

DESIGN	BY J. Denis	CHECKED A. Akinsanya	
DETAILS	BY J. Denis	CHECKED A. Akinsanya	
QUANTITIES	BY J. Duxbury	CHECKED A. Akinsanya	

ORIGINAL SCALE IN MILLIMETERS FOR REDUCED PLANS 0 10 20 30 40 50 60 70 80 90 100

PREPARED FOR THE
STATE OF CALIFORNIA
DEPARTMENT OF TRANSPORTATION

B. Maroney
PROJECT ENGINEER

BRIDGE NO. 34-0006L/R
KILOMETER POST 13.2/13.9

CU 04
EA 0120F1

DISREGARD PRINTS BEARING EARLIER REVISION DATES 06/19/09

REVISION DATES (PRELIMINARY STAGE ONLY)

SHEET 44353 OF

SAN FRANCISCO OAKLAND BAY BRIDGE
EAST SPAN SEISMIC SAFETY PROJECT
SELF-ANCHORED SUSPENSION BRIDGE
(SUPERSTRUCTURE & TOWER)

SKYWAY OBG LOWERING NEAR HINGE A NO. 3

FILE => I:\bb\04-012001\sas\contract plans and cco\cco\cco#106\3-original 06-19-09\dgn\cco106shear3.dgn

100 % PS&E

USERNAME => ollahanek DATE PLOTTED => 19 JUN 2009 TIME PLOTTED => 10:59:50

MODIFICATION OF EXISTING SUPPORTS:

1. Secure the Hinge A Pipe Beams against lateral and longitudinal movement.
2. Activate three jacks and raise Transition Structure by 25 mm.
3. Switch out and reconfigure the jack and shim stack at the fourth location. Activate lock rings on the jack when re-configuring the support.
4. Lower the box girder back on the shim stacks.
5. Raise the fourth jack and lower one of the other three (not diagonal).
6. Repeat Steps (2) to (5) at the remaining locations. Do not re-configure a support diagonal from the previously completed.
7. The OBG (location Northing, Easting and Elevation) shall be surveyed at each jacking step and recorded.
8. The jack loads shall be recorded at each jacking step.

Lowering Procedure:

1. Jack the Transition Structure up by 25 mm clear of the shim packs, using the four jacks, pressurized equally; note the pressure at which each jack "lifts-off" the corresponding shim pack. Record the "lift-off" pressure in the jacks.
2. Remove one 100 mm support pan at each support.
3. Lower the Transition Structure very slowly, avoiding any impact, and set down onto supports. Resurvey the Transition Structure (at the locations indicated on "Skyway OBG Lowering Near Hinge A No.6" sheet) to determine elevations, longitudinal and cross slopes.
4. Compress jacks and remove one 100 mm jack pan at each jack.
5. Repeat Steps 1 thru 4 until Transition Structure is at PGL.

Caltrans Metric

DIST.	COUNTY	ROUTE	KILOMETER POST TOTAL PROJECT	SHEET NO.	TOTAL SHEETS
04	SF	80	13.2/13.9	860S4	1204

REGISTERED ENGINEER - CIVIL

06-19-09

PLANS APPROVAL DATE

REGISTERED PROFESSIONAL ENGINEER Brian Maroney No. 39754 Exp. 12/31/09 CIVIL STATE OF CALIFORNIA

The State of California or its officers or agents shall not be responsible for the accuracy or completeness of electronic copies of this plan sheet.

T.Y. LIN / MOFFATT & NICHOL
825 BATTERY STREET
SAN FRANCISCO, CA 94111

Caltrans now has a web site! To get to the web site, go to: http://www.dot.ca.gov

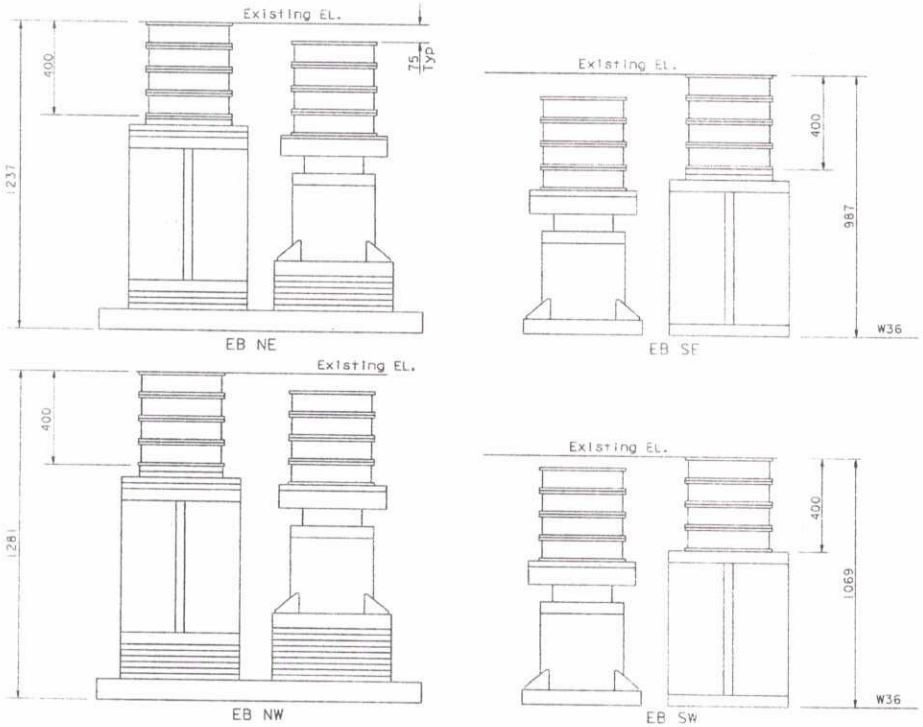

EASTBOUND
BEFORE LOWERING CONDITION (Looking East)
1:10

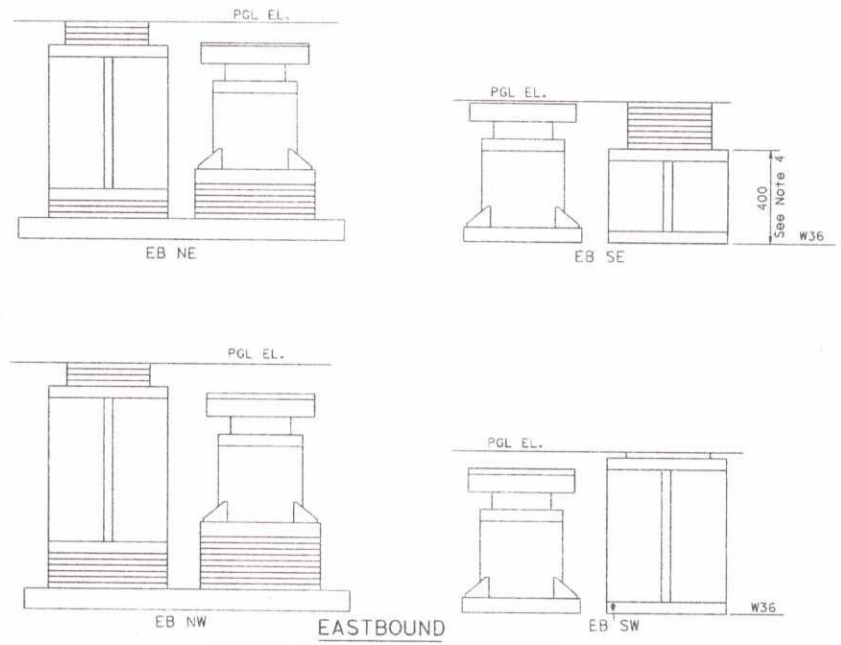

EASTBOUND
AFTER LOWERING CONDITION (Looking East)
1:10

NOTES:

1. All dimensions are approximate and shall be verified in the field.
2. To the extent possible, remove all equipment on the span at the time of the jacking operation, including trucks or other vehicles, construction materials, containers, etc. Note the presence or absence of railings, bike path, barriers, wearing surface, utilities, etc. Note the position of the secured pipe beams. Provide the Engineer with the location and magnitude of any such loads that cannot be removed.
3. The survey and jacking shall be completed before dawn, when structures are at uniform ambient temperature. Note the ambient and gradient temperatures in the Transition Structures when the lowering operations are performed. Note the wind speed.
4. An existing beam may be cut and re-welded to become a 400 mm beam. Alternatively, an existing W16 beam may be used.

CONTRACT CHANGE ORDER NO. ____
SHEET ____ OF ____

REQUESTS FOR INFORMATION NOT ADDRESSED IN THIS CCO REMAIN IN FORCE

ALL DIMENSIONS ARE IN MILLIMETERS UNLESS OTHERWISE SHOWN

R. Valizadeh/V. Toan/Y.L./W.L./F.C.
DESIGN OVERSIGHT

SIGN OFF DATE 06/19/09

Rev. Date: 5-18-98

MARK	DATE	DESCRIPTIONS	BY	CH'D	CCO#
0	06/19/09	SKYWAY OBG LOWERING NEAR HINGE A	JAD	AA	106

REVISIONS

DESIGN	BY J. Dennis	CHECKED	A. Akinsanya
DETAILS	BY J. Dennis	CHECKED	A. Akinsanya
QUANTITIES	BY J. Duxbury	CHECKED	A. Akinsanya

PREPARED FOR THE STATE OF CALIFORNIA DEPARTMENT OF TRANSPORTATION

B. Maroney
PROJECT ENGINEER

BRIDGE NO. 34-0006L/R
KILOMETER POST 13.2/13.9

SAN FRANCISCO OAKLAND BAY BRIDGE
EAST SPAN SEISMIC SAFETY PROJECT
SELF-ANCHORED SUSPENSION BRIDGE
(SUPERSTRUCTURE & TOWER)

SKYWAY OBG LOWERING NEAR HINGE A NO. 4

ORIGINAL SCALE IN MILLIMETERS FOR REDUCED PLANS 0 10 20 30 40 50 60 70 80 90 100

CU 04
EA 0120F1

DISREGARD PRINTS BEARING EARLIER REVISION DATES 06/19/09

REVISION DATES (PRELIMINARY STAGE ONLY)

SHEET 443S4 OF

FILE => I:\bb\04-0120f1\sas\contract plans and cco\cco\cco#106\3-original 06-19-09\dgn\cco106shear4.dgn

100 % PS&E

USERNAME => allshansk DATE PLOTTED => 19 JUN 2009 TIME PLOTTED => 11:00:08

DIST.	COUNTY	ROUTE	KILOMETER POST TOTAL PROJECT	SHEET NO.	TOTAL SHEETS
04	SF	80	13.2/13.9	86055	1204

Caltrans Metric

REGISTERED ENGINEER / CIVIL

06-19-09

PLANS APPROVAL DATE

The State of California or its officers or agents shall not be responsible for the accuracy or completeness of electronic copies of this plan sheet.

REGISTERED PROFESSIONAL ENGINEER Brian Maroney No. 39754 Exp. 12/31/09 CIVIL STATE OF CALIFORNIA

T.Y. LIN / MOFFATT & NICHOL
825 BATTERY STREET
SAN FRANCISCO, CA 94111

Caltrans now has a web site! To get to the web site, go to: http://www.dot.ca.gov

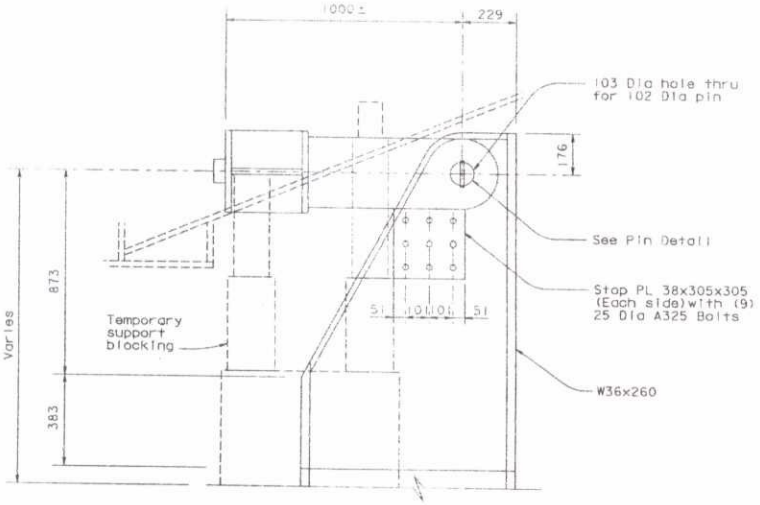

EXISTING

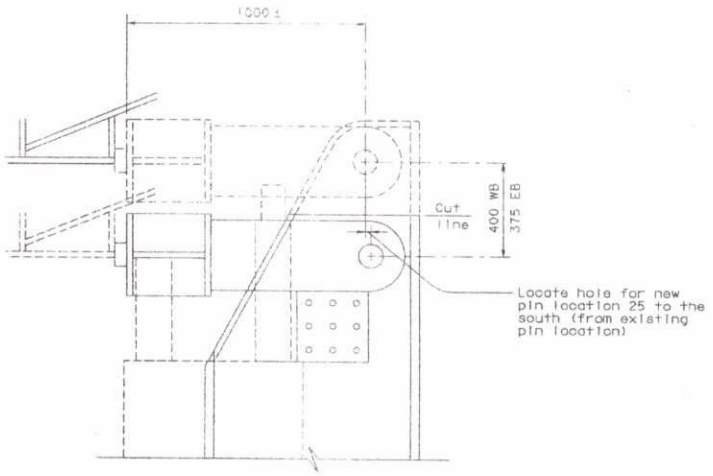

RETROFIT

SHEAR KEY MODIFICATIONS

1:20

RETROFIT EXISTING SHEAR KEY PROCEDURE:

1. The shear key shall be modified immediately prior to lowering.
2. Temporarily support horizontal brace on blocking and remove stop plates.
3. Drill new 103 Dia hole at location shown.
4. Drill new holes for stop plate bolts.
5. Re-install stop plates at new location.
6. Lower horizontal brace to new location and install 102 Dia pin.
7. Cut-off upper section of existing shear key as shown.
8. OBG may now be lowered.

NOTES:

1. All dimensions are approximate and shall be verified in the field.

CONTRACT CHANGE ORDER NO. ____
SHEET ____ OF ____

REQUESTS FOR INFORMATION NOT ADDRESSED IN THIS CCO REMAIN IN FORCE

ALL DIMENSIONS ARE IN MILLIMETERS UNLESS OTHERWISE SHOWN

R. Valizadeh/V. Toan/Y.L./W.L./F.C.
DESIGN OVERSIGHT

SIGN OFF DATE 06/19/09

Rev. Date: 5-18-98

MARK	DATE	DESCRIPTIONS	BY	CH'D	CCO#
0	06/19/09	SKYWAY OBG LOWERING NEAR HINGE A	JAD	AA	106

REVISIONS

DESIGN	BY J. Denis	CHECKED	A. Akinsanya
DETAILS	BY J. Denis	CHECKED	A. Akinsanya
QUANTITIES	BY J. Duxbury	CHECKED	A. Akinsanya

PREPARED FOR THE STATE OF CALIFORNIA DEPARTMENT OF TRANSPORTATION

B. Maroney
PROJECT ENGINEER

BRIDGE NO. 34-0006L/R
KILOMETER POST 13.2/13.9

SAN FRANCISCO OAKLAND BAY BRIDGE
EAST SPAN SEISMIC SAFETY PROJECT
SELF-ANCHORED SUSPENSION BRIDGE
(SUPERSTRUCTURE & TOWER)

SKYWAY OBG LOWERING NEAR HINGE A NO. 5

ORIGINAL SCALE IN MILLIMETERS FOR REDUCED PLANS 0 10 20 30 40 50 60 70 80 90 100

CU 04
EA 0120F1

DISREGARD PRINTS BEARING EARLIER REVISION DATES 06/19/09

REVISION DATES (PRELIMINARY STAGE ONLY)

SHEET 44355 OF

FILE => I:\bb\04-0120F1\sas\contract plans and cco\cco\cco#106\3-original 06-19-09\dgn\cco106shearc.dgn

100 % PS&E

USERNAME => allahanak DATE PLOTTED => 19 JUN 2009 TIME PLOTTED => 11:00:24

DIST.	COUNTY	ROUTE	KILOMETER POST TOTAL PROJECT	SHEET NO.	TOTAL SHEETS
04	SF	80	13.2/13.9	860S6	1204

Caltrans Metric

REGISTERED ENGINEER - CIVIL

06-19-09

PLANS APPROVAL DATE

The State of California or its officers or agents shall not be responsible for the accuracy or completeness of electronic copies of this plan sheet.

REGISTERED PROFESSIONAL ENGINEER Brian Maroney No. 39754 Exp. 12/31/09 CIVIL STATE OF CALIFORNIA

T.Y. LIN / MOFFATT & NICHOL
825 BATTERY STREET
SAN FRANCISCO, CA 94111

Caltrans now has a web site! To get to the web site, go to: http://www.dot.ca.gov

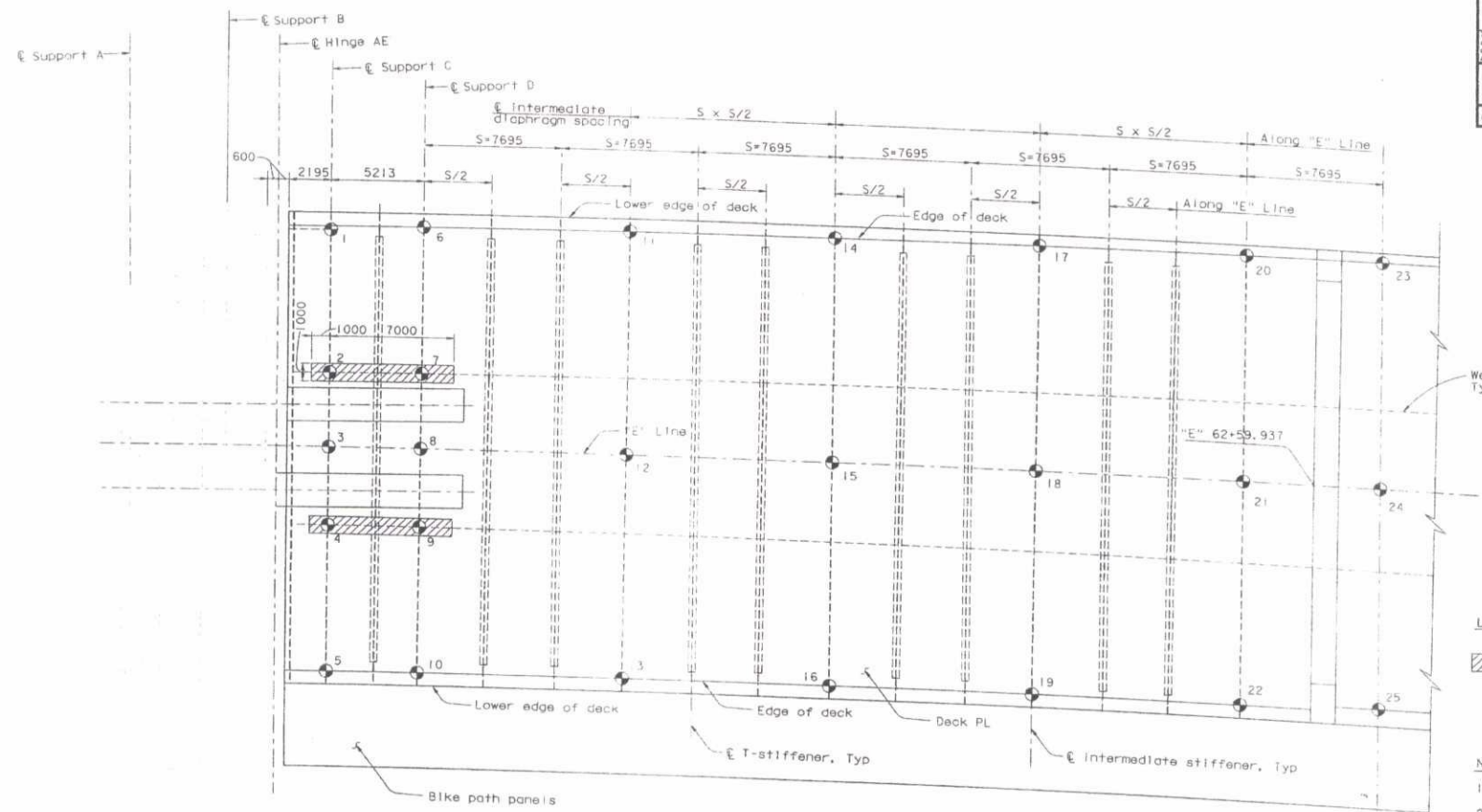

SKYWAY TRANSITION STRUCTURE

1:125

LEGEND:

Concrete weight placing limits

Survey Point

NOTES:

1. Eastbound shown; Westbound similar.
2. All dimensions are approximate and shall be verified in the field.

100 % PS&E

CONTRACT CHANGE ORDER NO. ____
SHEET ____ OF ____

REQUESTS FOR INFORMATION NOT ADDRESSED IN THIS CCO REMAIN IN FORCE

ALL DIMENSIONS ARE IN MILLIMETERS UNLESS OTHERWISE SHOWN

R. Valizadeh/V. Toan/Y.L./W.L./F.C.
DESIGN OVERSIGHT

SIGN OFF DATE 06/19/09

Rev. Date: 5-18-98

MARK	DATE	DESCRIPTIONS	BY	CH'D	CCO#
0	06/19/09	SKYWAY OBG LOWERING NEAR HINGE A	JAD	AA	106

REVISIONS

DESIGN	BY J. Denis	CHECKED	A. Akinsanya
DETAILS	BY J. Denis	CHECKED	A. Akinsanya
QUANTITIES	BY J. Duxbury	CHECKED	A. Akinsanya

ORIGINAL SCALE IN MILLIMETERS FOR REDUCED PLANS 0 10 20 30 40 50 60 70 80 90 100

PREPARED FOR THE STATE OF CALIFORNIA DEPARTMENT OF TRANSPORTATION

B. Maroney
PROJECT ENGINEER

BRIDGE NO. 34-0006L/R
KILOMETER POST 13.2/13.9

CU 04
EA 0120F1

DISREGARD PRINTS BEARING EARLIER REVISION DATES 06/19/09

REVISION DATES (PRELIMINARY STAGE ONLY)

SAN FRANCISCO OAKLAND BAY BRIDGE
EAST SPAN SEISMIC SAFETY PROJECT
SELF-ANCHORED SUSPENSION BRIDGE
(SUPERSTRUCTURE & TOWER)

SKYWAY OBG LOWERING NEAR HINGE A NO. 6

SHEET 443S6 OF

FILE => I:\bb\04-012001\sas\contract plans and cco\cco\cco#106\3-original 06-19-09\dgn\cahhng01s01.dgn

USERNAME => allshansh DATE PLOTTED => 19 JUN 2009 TIME PLOTTED => 10:58:38