| DIST. | COUNTY | ROUTE | KILOMETER POST TOTAL PROJECT | SHEET NO. | TOTAL SHEETS |
|---|---|---|---|---|---|
| 04 | SF | 80 | 13.2/13.9 | 592S5 | 1204 |

REGISTERED ENGINEER - CIVIL

01-02-09

PLANS APPROVAL DATE

*The State of California or its officers or agents shall not be responsible for the accuracy or completeness of electronic copies of this plan sheet.*

REGISTERED PROFESSIONAL ENGINEER Marwan N. Nader No. C 054426 Exp. 12/31/09 CIVIL STATE OF CALIFORNIA

T.Y. LIN / MOFFATT & NICHOL
825 BATTERY STREET
SAN FRANCISCO, CA 94111

*Caltrans now has a web site! To get to the web site, go to: http://www.dot.ca.gov*

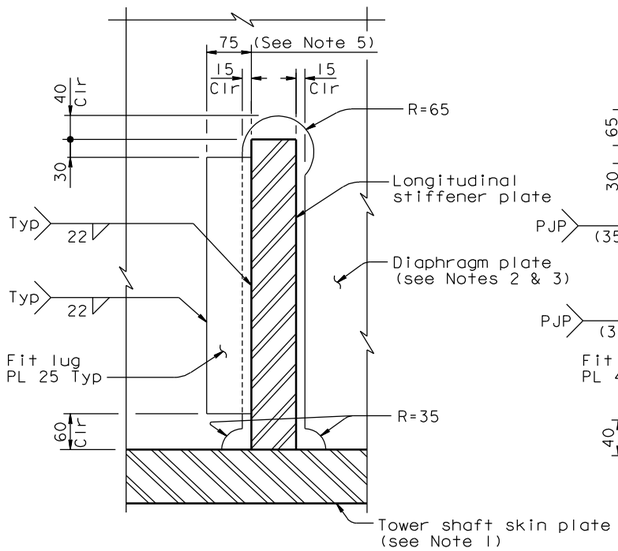


## TYPICAL COPE DETAILS

1:5

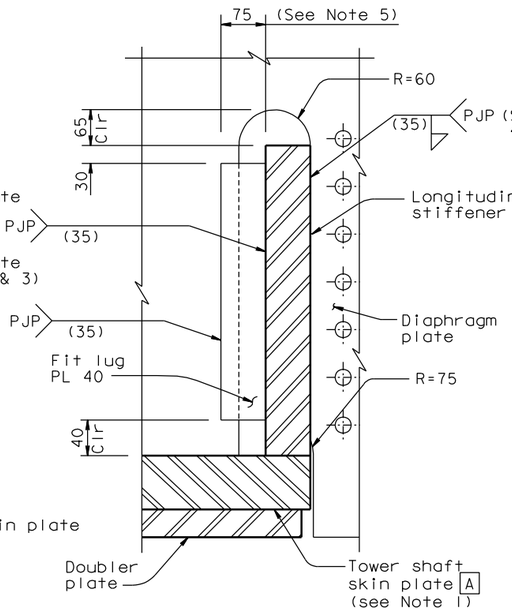


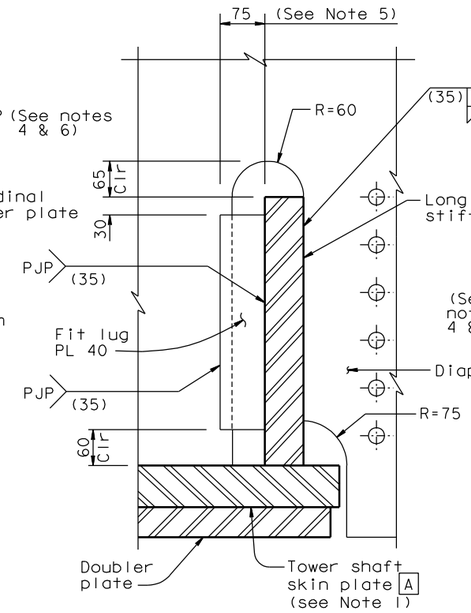


## COPE DETAILS AT TOWER STRUT TYPES 1 AND 2

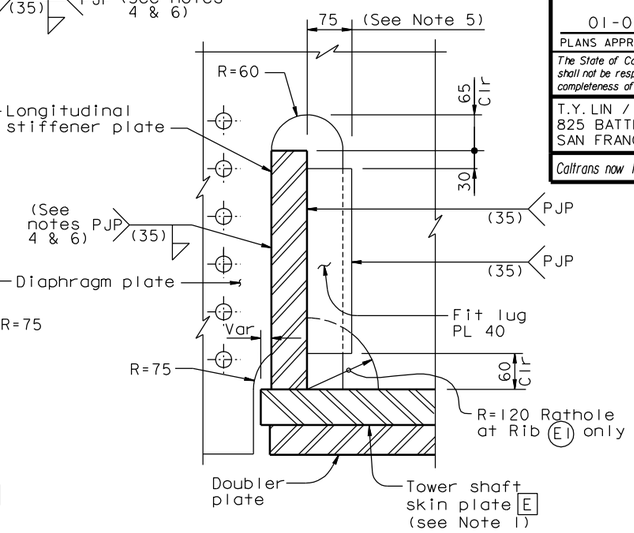


## COPE DETAILS AT TOWER STRUT TYPE 3

## DETAIL A (See Note 1)

1:5

NOTES:

1. For details of skin plate and longitudinal stiffeners, see "Tower Shaft Details" sheets.
2. For diaphragm plate thickness, see "Tower Diaphragm Details No.2" through "Tower Diaphragm Details No.5" sheets. For diaphragm plate thickness at elevations 9.000 and 13.000, see "Tower Diaphragm Details No.14" sheet.
3. For diaphragm to tower shaft skin plate weld size, see "Tower Diaphragm Details No.11" sheet.
4. Corners of strut flange splice plates shall be beveled to clear reinforcing fillet weld (if any).
5. Fit lug width may be increased from 75 mm to 150 mm.
6. Minimum depth of penetration = 30.

CONTRACT CHANGE ORDER NO. ____
SHEET ___ OF ___

*REQUESTS FOR INFORMATION NOT ADDRESSED IN THIS CCO REMAIN IN FORCE*

## ALTERNATE FIT LUG DETAILS

ALL DIMENSIONS ARE IN MILLIMETERS UNLESS OTHERWISE SHOWN

R. Valizadeh/V. Toan/Y.L./W.L./F.C.
DESIGN OVERSIGHT
SIGN OFF DATE 01/02/09

| MARK | DATE | DESCRIPTIONS | BY | CH'D | CCO# |
|---|---|---|---|---|---|
| 0 | 01/02/09 | TOWER FIT LUGS | MN | NV | 105 |

REVISIONS

| | BY | CHECKED |
|---|---|---|
| DESIGN | M. Nader | N. Vo |
| DETAILS | M. Nader | N. Vo |
| QUANTITIES | M. Nader | N. Vo |

PREPARED FOR THE STATE OF CALIFORNIA DEPARTMENT OF TRANSPORTATION

R. Manzanarez
PROJECT ENGINEER

BRIDGE NO. 34-0006L/R
KILOMETER POST 13.2/13.9

SAN FRANCISCO OAKLAND BAY BRIDGE
EAST SPAN SEISMIC SAFETY PROJECT
SELF-ANCHORED SUSPENSION BRIDGE
(SUPERSTRUCTURE & TOWER)

# TOWER DIAPHRAGM DETAILS NO. 22

Rev. Date: 5-18-98

ORIGINAL SCALE IN MILLIMETERS FOR REDUCED PLANS 0 10 20 30 40 50 60 70 80 90 100

CU 04
EA 0120F1

DISREGARD PRINTS BEARING EARLIER REVISION DATES

REVISION DATES (PRELIMINARY STAGE ONLY) 01/02/09

SHEET 175S5 OF

FILE => I:\bb\04-012001\sas\contract plans and cco\cco\cco#105\original 01-02-09\dgn\aetdh06s01.dgn

100% PS&E

USERNAME => dwinrow DATE PLOTTED => 12 JAN 2009 TIME PLOTTED => 14:13:34