DIST.	COUNTY	ROUTE	KILOMETER POST TOTAL PROJECT	SHEET NO.	TOTAL SHEETS
04	SF	80	13.2/13.9	764S1	1204

REGISTERED ENGINEER - CIVIL

06-11-10

PLANS APPROVAL DATE

REGISTERED PROFESSIONAL ENGINEER Marwan N. Nader No. C 054426 Exp. 12/31/11 CIVIL STATE OF CALIFORNIA

The State of California or its officers or agents shall not be responsible for the accuracy or completeness of electronic copies of this plan sheet.

T.Y. LIN / MOFFATT & NICHOL
825 BATTERY STREET
SAN FRANCISCO, CA 94111

Caltrans now has a web site! To get to the web site, go to: http://www.dot.ca.gov

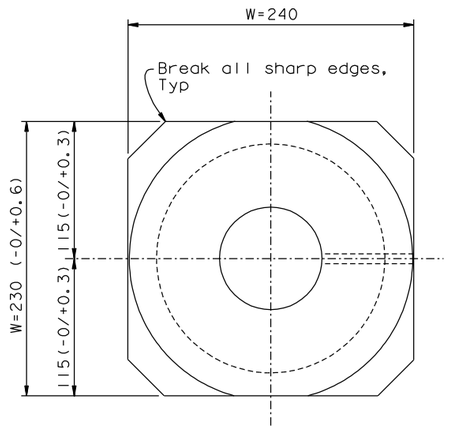

PLAN VIEW

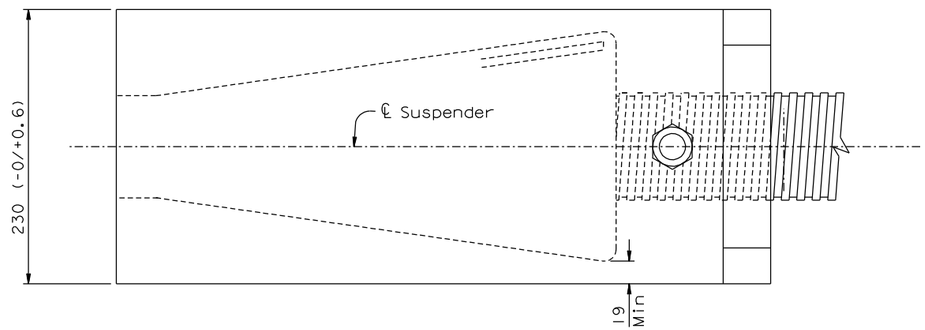

SIDE VIEW

ALTERNATE SUSPENDER SOCKET TYPE 1

1:2.5

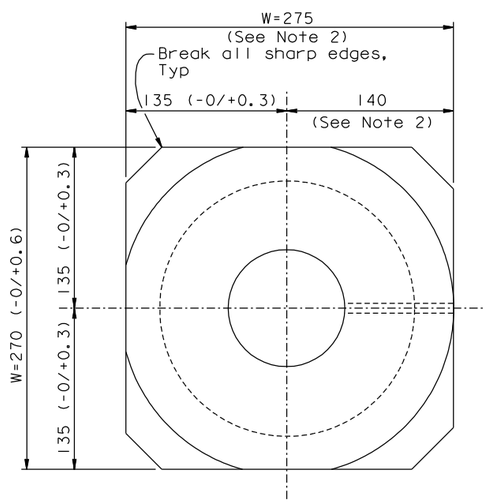

PLAN VIEW

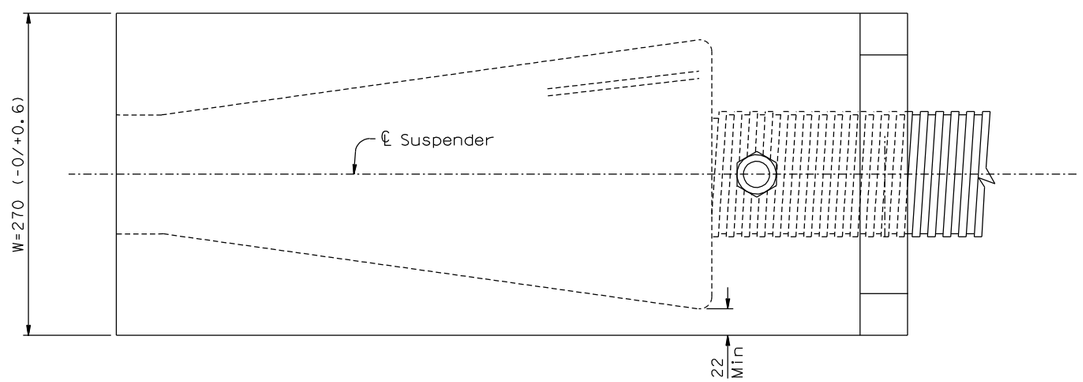

SIDE VIEW

ALTERNATE SUSPENDER SOCKET TYPE 2

1:2.5

NOTES:

1. For details not shown see "Suspender Socket Details" sheet.
2. At the Contractor's option, the front side of Type II sockets may be machined to a final dimension of 135 (-0/+0.3) from the centerline of suspender. In this case the Contractor shall adjust the set screw length per "Suspender Socket Details" sheet.

CONTRACT CHANGE ORDER NO. _____
SHEET ____ OF ____

REQUESTS FOR INFORMATION NOT ADDRESSED IN THIS CCO REMAIN IN FORCE

ALL DIMENSIONS ARE IN MILLIMETERS UNLESS OTHERWISE SHOWN

R. Valizadeh/V. Toan/Y.L./W.L./F.C.
DESIGN OVERSIGHT
SIGN OFF DATE 06/11/10

MARK	DATE	DESCRIPTIONS	BY	CH'D	CCO#
0	06/11/10	SUSPENDER BRACKETS	GB	MN	104S1

REVISIONS

DESIGN	BY G. Baker	CHECKED M. Nader	
DETAILS	BY G. Baker	CHECKED M. Nader	
QUANTITIES	BY G. Baker	CHECKED M. Nader	

PREPARED FOR THE STATE OF CALIFORNIA DEPARTMENT OF TRANSPORTATION

R. Manzanarez
PROJECT ENGINEER

BRIDGE NO. 34-0006L/R
KILOMETER POST 13.2/13.9

SAN FRANCISCO OAKLAND BAY BRIDGE
EAST SPAN SEISMIC SAFETY PROJECT
SELF-ANCHORED SUSPENSION BRIDGE
(SUPERSTRUCTURE & TOWER)

SUSPENDER SOCKET DETAILS (ALTERNATE)

Rev. Date: 5-18-98

ORIGINAL SCALE IN MILLIMETERS FOR REDUCED PLANS 0 10 20 30 40 50 60 70 80 90 100

CU 04
EA 0120F1

DISREGARD PRINTS BEARING EARLIER REVISION DATES 06/11/10

REVISION DATES (PRELIMINARY STAGE ONLY)

SHEET 347S1 OF

FILE => I:\bb\04-012001\sas\contract plans and cco\cco\cco#104s1\1-original 10-29-10\dgn\agsad02a.dgn

100% PS&E

USERNAME => arivera DATE PLOTTED => 29 OCT 2010 TIME PLOTTED => 09:34:37