| DIST. | COUNTY | ROUTE | KILOMETER POST TOTAL PROJECT | SHEET NO. | TOTAL SHEETS |
|---|---|---|---|---|---|
| 04 | SF | 80 | 13.2/13.9 | 764R1 | 1204 |

Caltrans Metric

George Baker
REGISTERED ENGINEER - CIVIL
12-6-04
PLANS APPROVAL DATE

REGISTERED PROFESSIONAL ENGINEER George S. Baker No. C 57112 Exp. 12/31/05 CIVIL STATE OF CALIFORNIA

*The State of California or its officers or agents shall not be responsible for the accuracy or completeness of electronic copies of this plan sheet.*

T.Y. LIN / MOFFATT & NICHOL
825 BATTERY STREET
SAN FRANCISCO, CA 94111

*Caltrans now has a web site! To get to the web site, go to: http://www.dot.ca.gov*

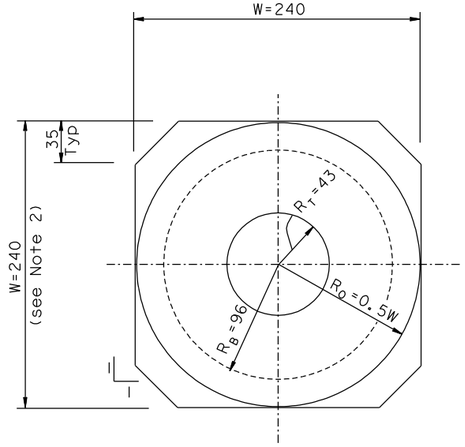


PLAN VIEW
1:2.5

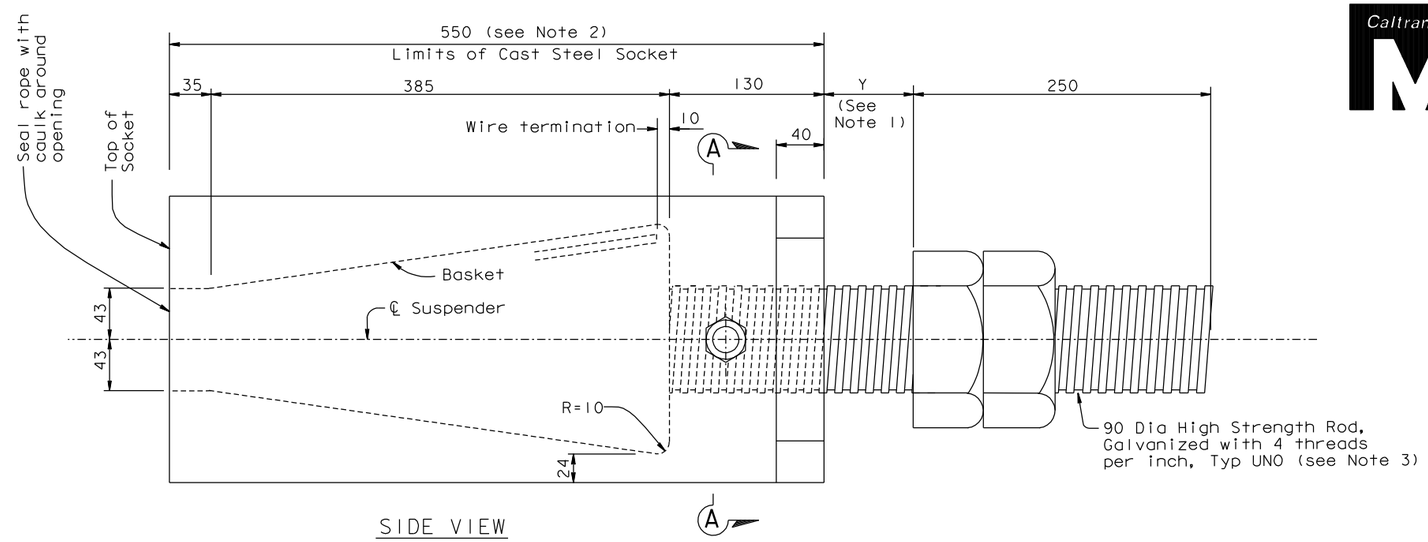


SIDE VIEW

SUSPENDER SOCKET TYPE 1 (see Table)
1:2.5

| SOCKET LOCATION TABLE | | |
|---|---|---|
| SOCKET TYPE | SUSPENDER TYPE | SUSPENDER ROPE SIZE (mm) |
| 1 | 1 | 75 DIA (see Note 4) |
| 2 | 2 | 90 DIA (see Note 4) |

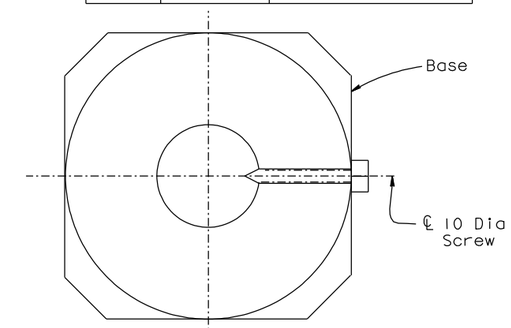


Section A'-A' Similar

SECTION A-A
1:2.5

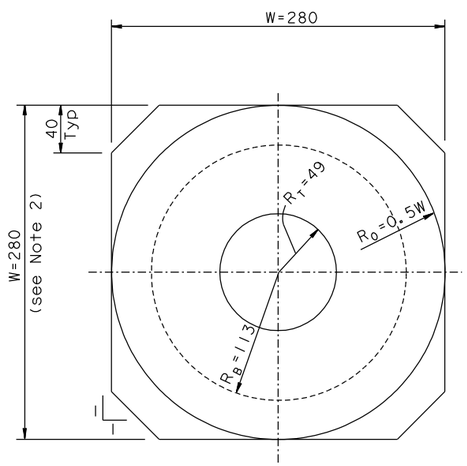


PLAN VIEW
1:2.5

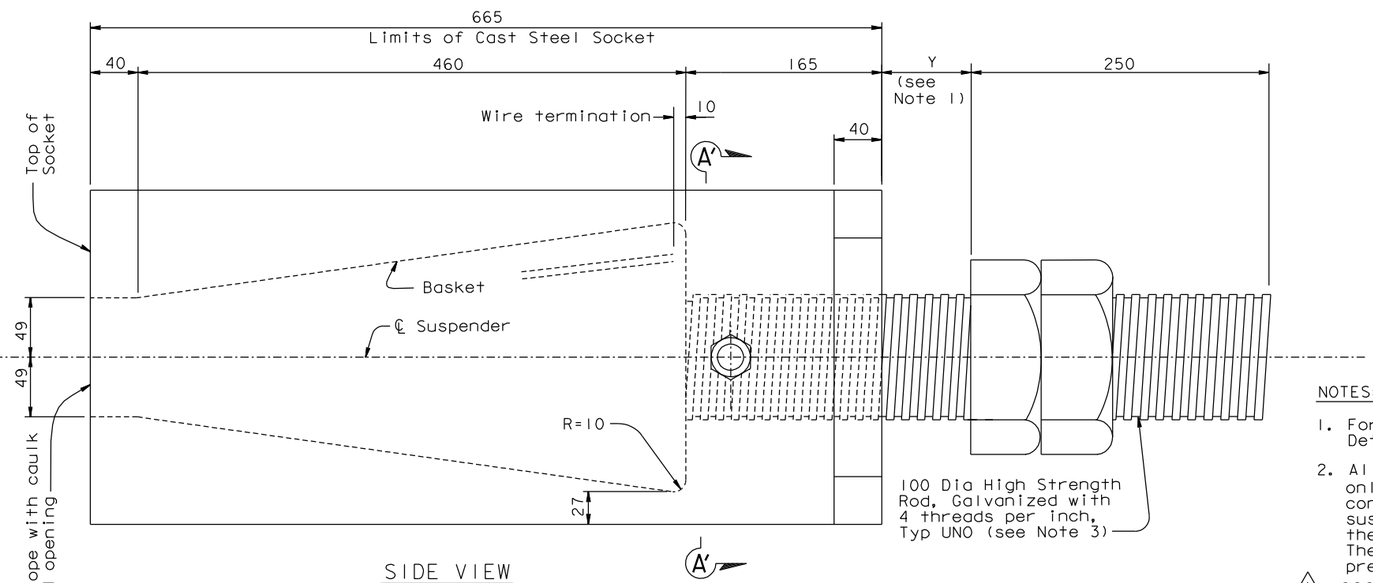


SIDE VIEW

SUSPENDER SOCKET TYPE 2 (see Table)
1:2.5

NOTES:

1. For dimension Y, see "Suspender Bracket Details No.3" sheet.
2. All suspender socket dimensions are for information only. The Contractor shall develop socket details consistent with his means and methods and the suspender bracket geometry, and shall submit them to the Engineer for review and approval. The socket dimensions shall be such that adequate prestressing and erection clearance is provided.

   △1 For alternate suspender socket, see "Suspender Socket Details (Alternate)" sheet.
3. For suspender socket anchor rod material, see "General Notes" sheets.
4. Rope sizes given for information only. For rope size, see "Suspender Layout No.1" sheet.

ABBREVIATIONS:

W = Width of Suspender Socket Base
$R_T$ = Radius of Opening at Top of Socket
$R_B$ = Radius of Opening at Bottom of Basket
$R_O$ = Outer Radius of Socket

REGISTERED PROFESSIONAL ENGINEER Marwan N. Nader No. C 054426 Exp. 12/31/11 CIVIL STATE OF CALIFORNIA

FOR REVISIONS ONLY

CONTRACT CHANGE ORDER NO. _____
SHEET ___ OF ___

*REQUESTS FOR INFORMATION NOT ADDRESSED IN THIS CCO REMAIN IN FORCE*

ALL DIMENSIONS ARE IN MILLIMETERS UNLESS OTHERWISE SHOWN

R. Valizadeh/V. Toan/Y.L./W.L./F.C.
DESIGN OVERSIGHT
Roya Valizadeh / Vong Toan / Y. Liu
SIGN OFF DATE 06/11/10

| MARK | DATE | DESCRIPTIONS | BY | CH'D | CCO# |
|---|---|---|---|---|---|
| 1 | 06/11/10 | SUSPENDER BRACKETS | GB | MN | 104S1 |

REVISIONS

| | BY | CHECKED |
|---|---|---|
| DESIGN | G. Baker | T. McMeans |
| DETAILS | S. Camo | P. Ritchie |
| QUANTITIES | C. Mauch | C. Mibelli |

PREPARED FOR THE STATE OF CALIFORNIA DEPARTMENT OF TRANSPORTATION

R. Manzanarez
PROJECT ENGINEER

BRIDGE NO. 34-0006L/R
KILOMETER POST 13.2/13.9

SAN FRANCISCO OAKLAND BAY BRIDGE
EAST SPAN SEISMIC SAFETY PROJECT
SELF-ANCHORED SUSPENSION BRIDGE
(SUPERSTRUCTURE & TOWER)

# SUSPENDER SOCKET DETAILS

Rev. Date: 5-18-98

ORIGINAL SCALE IN MILLIMETERS FOR REDUCED PLANS 0 10 20 30 40 50 60 70 80 90 100

CU 04
EA 0120F1

DISREGARD PRINTS BEARING EARLIER REVISION DATES

REVISION DATES (PRELIMINARY STAGE ONLY): 01/18/99 05/18/99 08/02/99 05/17/01 04/08/02 07/01/02 12/19/02

SHEET 347R1 OF

FILE => I:\bb\04-012001\sas\contract plans and cco\cco\cco*104s1\1-original 10-29-10\dgn\agsad02.dgn

USERNAME => arivera DATE PLOTTED => 29 OCT 2010 TIME PLOTTED => 09:35:13

100% PS&E