DIST.	COUNTY	ROUTE	KILOMETER POST TOTAL PROJECT	SHEET NO.	TOTAL SHEETS
04	SF	80	13.2/13.9	622R2	1204

Caltrans Metric

George Baker
REGISTERED ENGINEER - CIVIL
12-6-04
PLANS APPROVAL DATE

REGISTERED PROFESSIONAL ENGINEER George S. Baker No. C57112 Exp. 12/31/05 CIVIL STATE OF CALIFORNIA

The State of California or its officers or agents shall not be responsible for the accuracy or completeness of electronic copies of this plan sheet.

REGISTERED PROFESSIONAL ENGINEER Daniel J. Turner No. C 65033 Exp. 06/30/09 CIVIL STATE OF CALIFORNIA

FOR REVISIONS ONLY

T.Y. LIN / MOFFATT & NICHOL
825 BATTERY STREET
SAN FRANCISCO, CA 94111

Caltrans now has a web site! To get to the web site, go to: http://www.dot.ca.gov

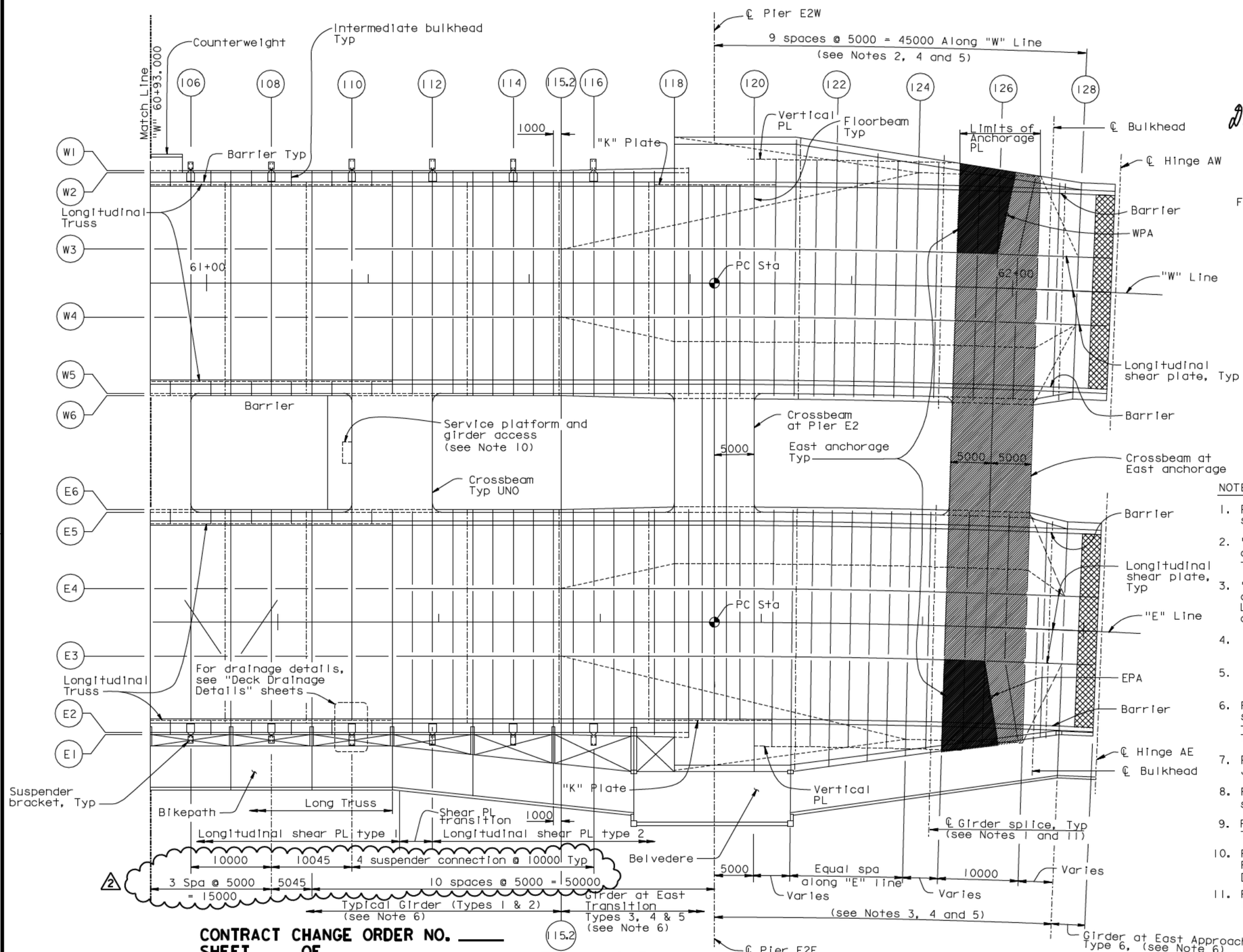

LEGEND:

- East anchorage
- Top anchorage plate
- Blockout for modular joint (see Note 7)

NOTES:

1. For girder splice details, see "Typical Girder Details" sheets.
2. "W" Line floorbeams from PP120.5 through PP124.5, and PP126, PP127.5 and PP128 are radial with respect to "W" Line curve.
3. "E" Line floorbeams from PP120.5 through PP124.5, and PP126, PP127.5 and 128 are aligned with "W" Line floorbeams and radial with respect to "E" Line curve.
4. "W" and "E" Line floorbeams from PP118 through PP120 are parallel.
5. "W" and "E" Line floorbeams from PP125 through PP127 are parallel.
6. For typical girder details, see "Typical Girder Details" sheets. For girder details and transition at East transition PP118 through PP128, see "Girder at East Transition" and "Girder At Pier E2" sheets.
7. For modular joint details, see "Hinge A Expansion Joint Details" sheets.
8. For Hinge A bulkheads, floorbeams, and joint blockout, see "Hinge A Details" sheets.
9. For "K" and vertical plates, see "Girder at East Transition Details" sheets.
10. For service platform details, see "Road Plans". For girder access details, see "Girder Access Details" sheets.
11. From PP115 through PP128, the distance between center line of girder splice and adjacent floorbeam is 800.

CONTRACT CHANGE ORDER NO. ____
SHEET ___ OF ___

REQUESTS FOR INFORMATION NOT ADDRESSED IN THIS CCO REMAIN IN FORCE

FRAMING PLAN

1:250

ALL DIMENSIONS ARE IN MILLIMETERS UNLESS OTHERWISE SHOWN

100 % PS&E

DATE PLOTTED => 15 JAN 2009 TIME PLOTTED => 17:46:42

USERNAME => dwinrow

R. Vallizadeh/V. Toan/Y.L./W.L./F.C.
DESIGN OVERSIGHT
Roya Vallizadeh / Vong Toan / Y. Liu
SIGN OFF DATE 01/16/09

MARK	DATE	DESCRIPTIONS	BY	CH'D	CCO#
2	01/16/09	BOX GIRDER AXIAL CAMBER	GB	DT	103
1	08/24/07	BARRIER MODIFICATIONS	GB	DT	44

REVISIONS

	BY	CHECKED
DESIGN	G. Baker	T. McMeans
DETAILS	M. Gulyas	T. McMeans
QUANTITIES	G. Baker	M. Roberts

PREPARED FOR THE STATE OF CALIFORNIA DEPARTMENT OF TRANSPORTATION

R. Manzanarez
PROJECT ENGINEER

BRIDGE NO. 34-0006L/R
KILOMETER POST 13.2/13.9

SAN FRANCISCO OAKLAND BAY BRIDGE
EAST SPAN SEISMIC SAFETY PROJECT
SELF-ANCHORED SUSPENSION BRIDGE (SUPERSTRUCTURE & TOWER)

GIRDER FRAMING PLAN NO. 4

Rev. Date: 5-18-98

ORIGINAL SCALE IN MILLIMETERS FOR REDUCED PLANS 0 10 20 30 40 50 60 70 80 90 100

CU 04
EA 0120F1

DISREGARD PRINTS BEARING EARLIER REVISION DATES

REVISION DATES (PRELIMINARY STAGE ONLY) 01/18/99 05/18/99 08/26/99 04/26/01 05/17/01 04/26/02 07/24/02 12/19/02

SHEET 205R2 OF

FILE -> I:\bb\04-012001\sas\contract plans and cco\cco\cco#103\revision 01-16-09\dgn\aggfr04.dgn

DIST.	COUNTY	ROUTE	KILOMETER POST TOTAL PROJECT	SHEET NO.	TOTAL SHEETS
04	SF	80	13.2/13.9	645R1	1204

Caltrans Metric

George Baker
REGISTERED ENGINEER - CIVIL
12-6-04
PLANS APPROVAL DATE

REGISTERED PROFESSIONAL ENGINEER George S. Baker No. C57112 Exp. 12/31/05 CIVIL STATE OF CALIFORNIA

The State of California or its officers or agents shall not be responsible for the accuracy or completeness of electronic copies of this plan sheet.

T.Y. LIN / MOFFATT & NICHOL
825 BATTERY STREET
SAN FRANCISCO, CA 94111

Caltrans now has a web site! To get to the web site, go to: http://www.dot.ca.gov

Alternative Camber Method

1. At the Contractor's option, the Alternative Camber Method may be adopted which will enable the early fabrication of certain portions of the box girders. The Contractor may elect to fabricate the box girders and crossbeams from panel points 8 to 95 using camber values shown in Table 1 on "Camber Schedule" sheet, and Table 2 on "Camber Schedule-A" sheet, provided his approved erection plan and weight control procedure will produce box girder dead load moments from panel points 8 to 95 that are within 10 MN-m of the values shown in Chart A on "Camber Schedule" sheet.

2. For this erection engineering analysis, the Contractor shall assume the reactions at Hinges A and K to be as given on Table 2 on "Suspension Cable Layout No. 4" sheet. The Contractor shall determine the actual reactions by field measurement after construction of adjacent structures have been completed by Others.

3. Once the actual reactions at Hinges A and K have been determined, the Contractor shall perform a revised analysis to determine the camber for the remainder of the girder length from panel point 95 to Hinge A. The revised analysis shall incorporate all conditions of the as-fabricated structure, including measured reactions at Hinges A and K, suspended weight per shop drawings from panel points 8 to 95 and estimated suspended weight from panel point 95 to Hinge A. Box girder dead load moment from panel points 8 to 95 shall be within 10 MN-m of the design values given in Chart A on "Camber Schedule" sheet. Box girder dead load moment from panel point 95 to Hinge A shall not exceed the limits shown in "Range of Allowable Box Girder Dead Load Moment Diagram" on "Suspension Cable Layout No. 4" sheet. Camber for girder length from panel point 95 to Hinge A shall be consistent with corresponding box girder dead load moment from the revised analysis.

4. The axial camber schedule provides axial camber values taken at points B and F of the box girders. Positive values indicate as increase in fabricated length of girder face A. Curvatures resulting from cambers in the vertical direction and the roadway profile shall be developed in the fabrication of all other girder faces.

5. The crossbeams shall not be cambered for axial shortening from PP14 to PP112.

1 6. OBG attachments connected after load transfer and crossing the field splice between PP 108 and PP 110 shall be detailed with an additional 45 mm. For location see "Camber Schedule-C" and "Camber Schedule-D" sheets.

Table 3: Axial Camber Schedule (see Note 4)

Panel Point	Dead Load Axial Camber		Panel Point	Dead Load Axial Camber	
	"W" Line	"E" Line		"W" Line	"E" Line
8-10	4	4	68-70	4	4
10-12	4	4	70-72	5	5
12-14	4	4	72-74	5	5
14-16	5	5	74-76	4	4
16-18	5	5	76-78	5	5
18-20	5	5	78-80	5	5
20-22	5	5	80-82	4	4
22-24	5	5	82-84	5	5
24-26	5	5	84-86	5	5
26-28	5	5	86-88	4	4
28-30	5	5	88-90	5	5
30-32	5	5	90-92	5	5
32-34	5	5	92-94	4	4
34-36	5	5	94-96	5	5
36-38	5	5	96-98	5	5
38-40	5	5	98-100	4	1 4
40-42	5	5	100-102	5	5
42-44	5	5	102-104	5	5
44-46	5	5	104-106	4	4
46-48	5	5	106-108	5	1 5
48-50	4	4	108-110	49	49
50-52	5	5	110-112	4	4
52-54	5	5	112-114	2	1 2
54-56	5	5	114-116	2	2
56-58	4	4	116-118	1	1
58-60	5	5	118-120	0	0
60-62	5	5	120-122	1	1
62-64	4	4	122-124	2	2
64-66	5	5	124-126 1	3	1 3
66-68	5	5	126-Hinge A	4	4

See Note 6 1

Daniel J. Turner
REGISTERED PROFESSIONAL ENGINEER Daniel J. Turner No. C 65033 Exp. 06/30/09 CIVIL STATE OF CALIFORNIA

FOR REVISIONS ONLY

CONTRACT CHANGE ORDER NO. ____
SHEET ___ OF ___

REQUESTS FOR INFORMATION NOT ADDRESSED IN THIS CCO REMAIN IN FORCE

ALL DIMENSIONS ARE IN MILLIMETERS UNLESS OTHERWISE SHOWN

R. Vallizadeh/V. Toan/Y.L./W.L./F.C.
DESIGN OVERSIGHT
SIGN OFF DATE 01/16/09

MARK	DATE	DESCRIPTIONS	BY	CH'D	CCO#
1	01/16/09	BOX GIRDER AXIAL CAMBER	GB	DT	103

REVISIONS

	BY	CHECKED
DESIGN	G. Baker	P. Ritchie
DETAILS	S. Camo	T. McMeans
QUANTITIES	G. Baker	M. Roberts

PREPARED FOR THE STATE OF CALIFORNIA DEPARTMENT OF TRANSPORTATION

R. Manzanarez
PROJECT ENGINEER

BRIDGE NO. 34-0006L/R
KILOMETER POST 13.2/13.9

SAN FRANCISCO OAKLAND BAY BRIDGE
EAST SPAN SEISMIC SAFETY PROJECT
SELF-ANCHORED SUSPENSION BRIDGE
(SUPERSTRUCTURE & TOWER)

CAMBER SCHEDULE-B

Rev. Date: 5-18-98

ORIGINAL SCALE IN MILLIMETERS FOR REDUCED PLANS 0 10 20 30 40 50 60 70 80 90 100

CU 04
EA 0120F1

DISREGARD PRINTS BEARING EARLIER REVISION DATES

REVISION DATES (PRELIMINARY STAGE ONLY) 07/18/03

SHEET 228R1 OF

FILE -> I:\bb\04-012001\sas\contract plans and cco\cco\cco#103\revision 01-16-09\dgn\agdkd08b.dgn

100 % PS&E

USERNAME => dwinrow DATE PLOTTED => 15 JAN 2009 TIME PLOTTED => 17:44:52

DIST.	COUNTY	ROUTE	KILOMETER POST TOTAL PROJECT	SHEET NO.	TOTAL SHEETS
04	SF	80	13.2/13.9	645SIRI	1204

Caltrans Metric

REGISTERED ENGINEER - CIVIL

12-6-04

PLANS APPROVAL DATE

REGISTERED PROFESSIONAL ENGINEER Marwan N. Nader No. C 054426 Exp. 12/31/09 CIVIL STATE OF CALIFORNIA

The State of California or its officers or agents shall not be responsible for the accuracy or completeness of electronic copies of this plan sheet.

T.Y. LIN / MOFFATT & NICHOL
825 BATTERY STREET
SAN FRANCISCO, CA 94111

Caltrans now has a web site! To get to the web site, go to: http://www.dot.ca.gov

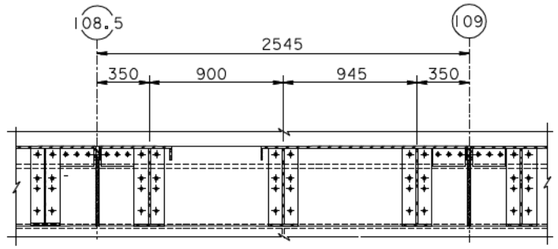

PLAN-STEEL BARRIER
1:20

Type 732 Modified for (W5) (E2)

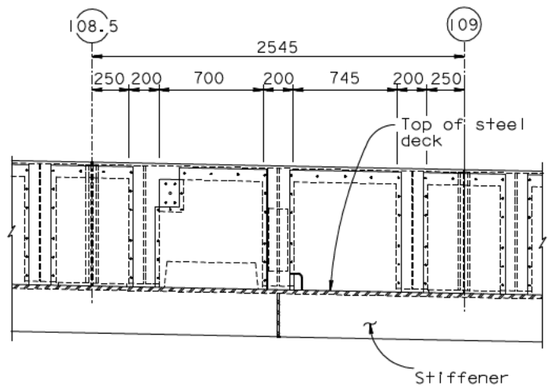

BARRIER SECTION
1:20

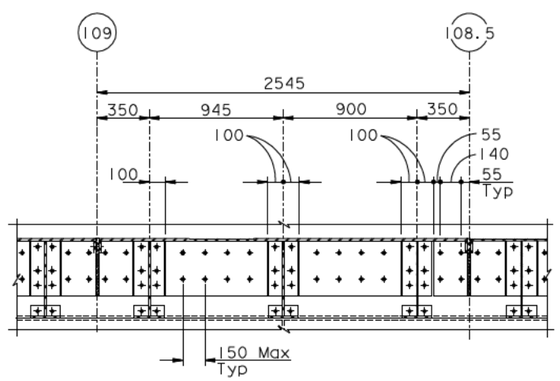

PLAN-STEEL BARRIER
1:20

Type 732 Modified for (W2) (E5)

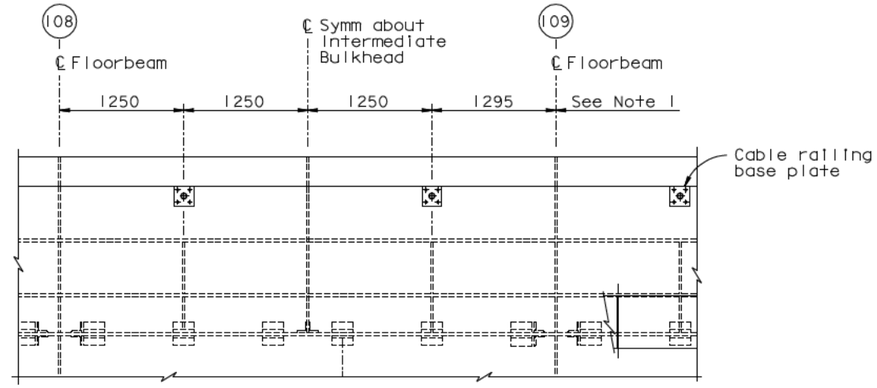

TYPICAL GIRDER DETAILS
PLAN
("W" Line shown, "E" Line similar)
1:30

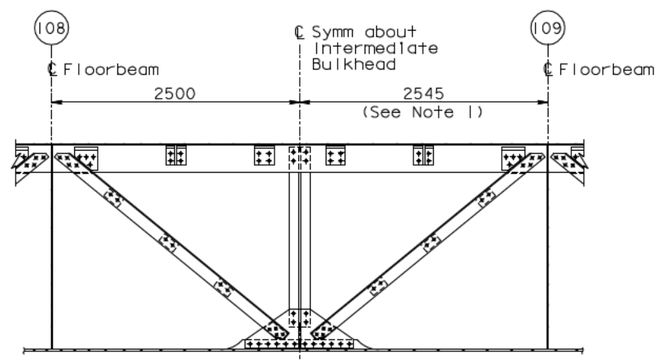

TYPICAL GIRDER DETAILS
ELEVATION
LONGITUDINAL TRUSS
("W" Line Shown, "E" Line Similar)
1:30

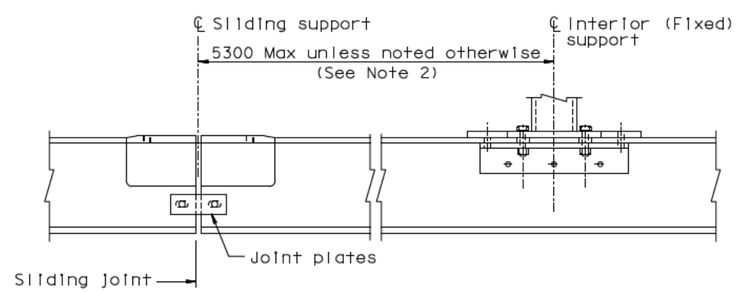

TRAVELER RAIL TYPICAL FABRICATION
1:10

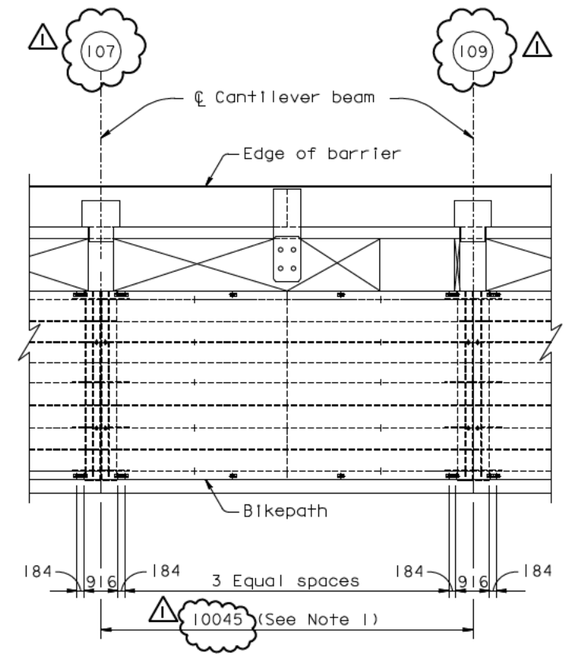

BIKEPATH FRAMING PLAN
1:80

NOTES:

1. Dimensions shown are the final horizontal erected girder dimensions.
2. The final erected girder dimension between PP 108 & PP 109 is 5045.

CONTRACT CHANGE ORDER NO. ____
SHEET ___ OF ___

REQUESTS FOR INFORMATION NOT ADDRESSED IN THIS CCO REMAIN IN FORCE

ALL DIMENSIONS ARE IN MILLIMETERS UNLESS OTHERWISE SHOWN

R. Valizadeh/V. Toan/Y.L./W.L./F.C.
DESIGN OVERSIGHT
SIGN OFF DATE 04/03/09

MARK	DATE	DESCRIPTIONS	BY	CH'D	CCO#
1	04/03/09	BOX GIRDER AXIAL CAMBER	GB	MN	103
0	01/16/09	BOX GIRDER AXIAL CAMBER	GB	MN	103

REVISIONS

DESIGN	BY G. Baker	CHECKED M. Nader
DETAILS	BY G. Baker	CHECKED M. Nader
QUANTITIES	BY G. Baker	CHECKED M. Nader

PREPARED FOR THE STATE OF CALIFORNIA DEPARTMENT OF TRANSPORTATION

R. Manzanarez
PROJECT ENGINEER

BRIDGE NO. 34-0006L/R
KILOMETER POST 13.2/13.9

SAN FRANCISCO OAKLAND BAY BRIDGE
EAST SPAN SEISMIC SAFETY PROJECT
SELF-ANCHORED SUSPENSION BRIDGE
(SUPERSTRUCTURE & TOWER)

CAMBER SCHEDULE-C

Rev. Date: 5-18-98

ORIGINAL SCALE IN MILLIMETERS FOR REDUCED PLANS 0 10 20 30 40 50 60 70 80 90 100

CU 04
EA 0120F1

DISREGARD PRINTS BEARING EARLIER REVISION DATES 01/16/09

REVISION DATES (PRELIMINARY STAGE ONLY)

SHEET 228SIRI OF

FILE -> I:\bb\04-012001\sas\contract plans and cco\cco\cco*103\revison 04-03-09\dgn\akbar01s01.dgn

USERNAME => dwinrow DATE PLOTTED => 07 APR 2009 TIME PLOTTED => 09:02:42

DIST.	COUNTY	ROUTE	KILOMETER POST TOTAL PROJECT	SHEET NO.	TOTAL SHEETS
04	SF	80	13.2/13.9	645S2	1204

REGISTERED ENGINEER - CIVIL

12-6-04
PLANS APPROVAL DATE

REGISTERED PROFESSIONAL ENGINEER Marwan N. Nader No. C 054426 Exp. 12/31/09 CIVIL STATE OF CALIFORNIA

The State of California or its officers or agents shall not be responsible for the accuracy or completeness of electronic copies of this plan sheet.

T.Y. LIN / MOFFATT & NICHOL
825 BATTERY STREET
SAN FRANCISCO, CA 94111

Caltrans now has a web site! To get to the web site, go to: http://www.dot.ca.gov

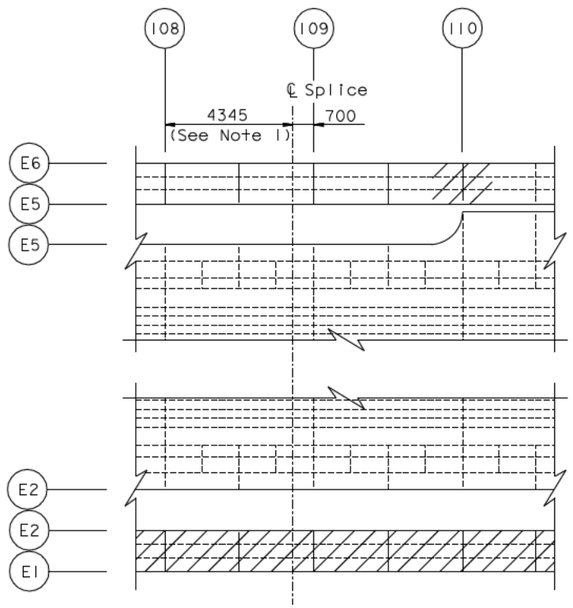

FACES A, B AND F
("E" LINE SHOWN, "W" LINE SIMILAR)

TYPICAL TOP GIRDER FACE LAYOUT

1:100

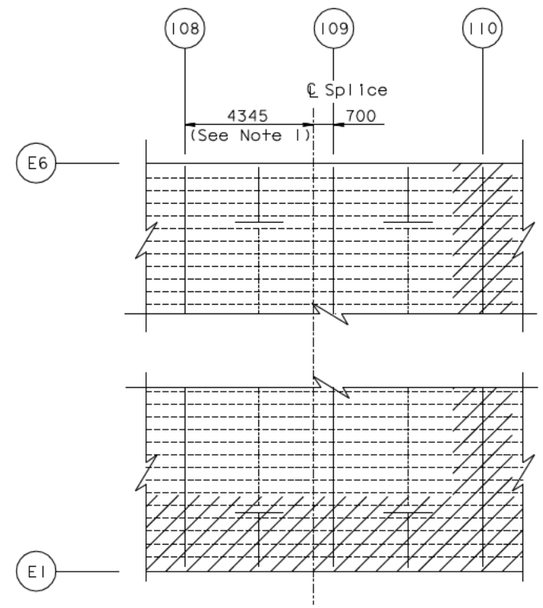

FACES C, D AND E
("E" LINE SHOWN, "W" LINE SIMILAR)

TYPICAL BOTTOM GIRDER FACE LAYOUT

1:100

NOTES:

1. Dimensions shown are the final horizontal erected girder dimensions.

CONTRACT CHANGE ORDER NO. ____
SHEET ___ OF ___

REQUESTS FOR INFORMATION NOT ADDRESSED IN THIS CCO REMAIN IN FORCE

ALL DIMENSIONS ARE IN MILLIMETERS UNLESS OTHERWISE SHOWN

MARK	DATE	DESCRIPTIONS	BY	CH'D	CCO#
0	01/16/09	BOX GIRDER AXIAL CAMBER	GB	MN	103

REVISIONS

R. Vallizadeh/V. Toan/Y.L./W.L./F.C.
DESIGN OVERSIGHT
Roya Vallizadeh / Vong Toan / Y. Liu
SIGN OFF DATE 1/16/09

Rev. Date: 5-18-98

DESIGN	BY G. Baker	CHECKED M. Nader	
DETAILS	BY G. Baker	CHECKED M. Nader	
QUANTITIES	BY G. Baker	CHECKED M. Nader	

PREPARED FOR THE STATE OF CALIFORNIA DEPARTMENT OF TRANSPORTATION

R. Manzanarez
PROJECT ENGINEER

BRIDGE NO. 34-0006L/R
KILOMETER POST 13.2/13.9

SAN FRANCISCO OAKLAND BAY BRIDGE
EAST SPAN SEISMIC SAFETY PROJECT
SELF-ANCHORED SUSPENSION BRIDGE
(SUPERSTRUCTURE & TOWER)

CAMBER SCHEDULE-D

ORIGINAL SCALE IN MILLIMETERS FOR REDUCED PLANS 0 10 20 30 40 50 60 70 80 90 100

CU 04
EA 0120F1

DISREGARD PRINTS BEARING EARLIER REVISION DATES 01/16/09

REVISION DATES (PRELIMINARY STAGE ONLY)

SHEET 228S2 OF

FILE -> I:\bb\04-012001\sas\contract plans and cco\cco\cco#103\revision 01-16-09\dgn\aggir04s01.dgn

USERNAME => dwinrow DATE PLOTTED => 15 JAN 2009 TIME PLOTTED => 17:47:52

DIST.	COUNTY	ROUTE	KILOMETER POST TOTAL PROJECT	SHEET NO.	TOTAL SHEETS
04	SF	80	13.2/13.9	875R5	1204

REGISTERED ENGINEER - CIVIL

12-6-04
PLANS APPROVAL DATE

REGISTERED PROFESSIONAL ENGINEER Marwan N. Nader No. C 054426 Exp. 12/31/09 CIVIL STATE OF CALIFORNIA

The State of California or its officers or agents shall not be responsible for the accuracy or completeness of electronic copies of this plan sheet.

T.Y. LIN / MOFFATT & NICHOL
825 BATTERY STREET
SAN FRANCISCO, CA 94111

Caltrans now has a web site! To get to the web site, go to: http://www.dot.ca.gov

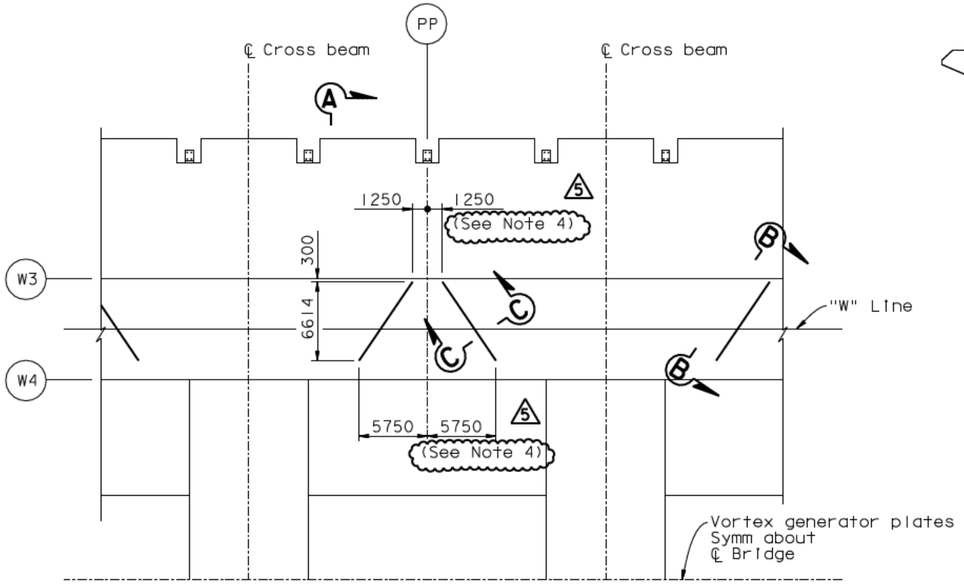

A DETAIL A
TYPICAL LAYOUT OF VORTEX GENERATOR PLATES
1:250
("W" Line shown, "E" Line similar)

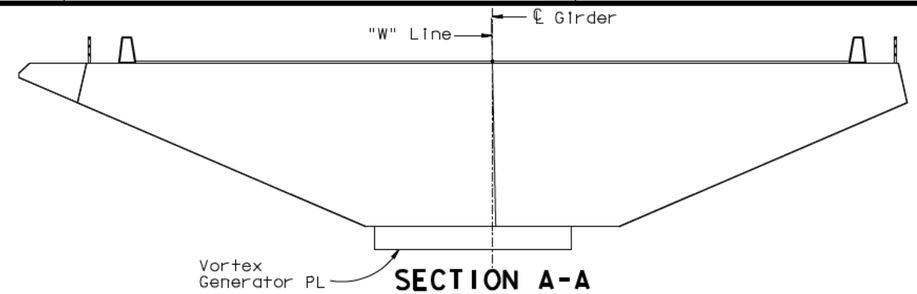

SECTION A-A
1:100

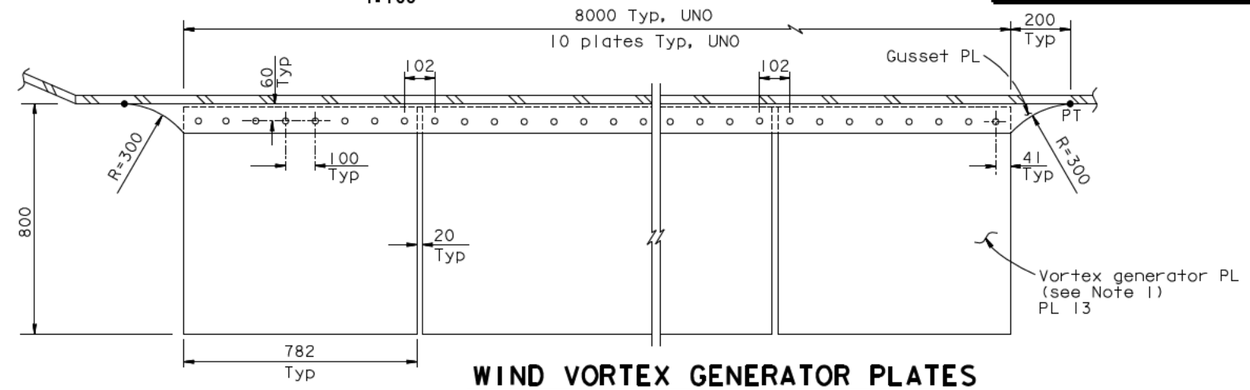

WIND VORTEX GENERATOR PLATES
VIEW B-B
1:10

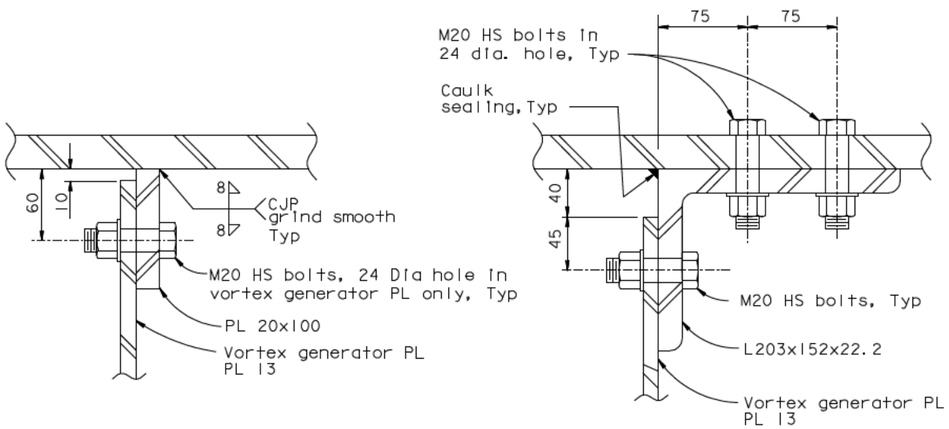

SECTION C-C
1:2.5

ALTERNATIVE
SECTION C-C
1:2.5

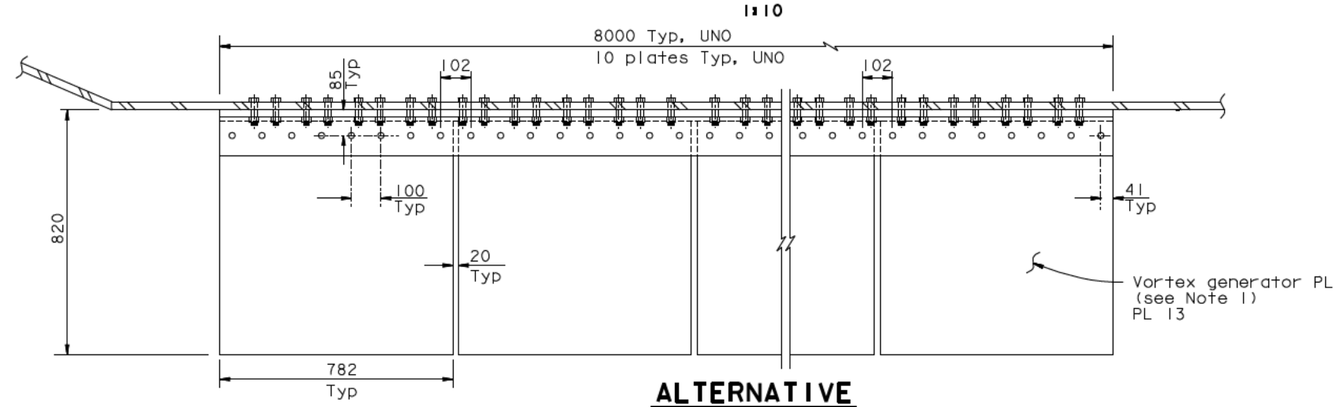

ALTERNATIVE
WIND VORTEX GENERATOR PLATES
VIEW B-B
1:10

NOTES:

1. A total of 704 vortex generator steel plates shall be fabricated and erected.
2. M20 HS bolts connecting L203x152x22.2 and box girder plate shall clear box girder stiffeners.
3. Installation of vortex generator steel plates shall not interfere with required clearances during construction of the bridge.
4. At PP 108 add 45 mm to the offset shown. (5)

ALL DIMENSIONS ARE IN MILLIMETERS UNLESS OTHERWISE SHOWN

CONTRACT CHANGE ORDER NO. ____
SHEET ___ OF ___

REQUESTS FOR INFORMATION NOT ADDRESSED IN THIS CCO REMAIN IN FORCE

MARK	DATE	DESCRIPTIONS	BY	CH'D	CCO#
5	01/16/09	BOX GIRDER AXIAL CAMBER	JD	MN	103
4	01/16/09	WIND VORTEX GENERATOR PLATES	GB	MN	26
3	07/07/08	CAULKING	AS	MN	66
2	08/31/07	WIND VORTEX GENERATOR PLATES	JD	MN	26
1	07/26/07	WIND VORTEX GENERATOR PLATES	CC	MN	26

REVISIONS

R. Vallizadeh/V. Toan/Y.L./W.L./F.C.
DESIGN OVERSIGHT
SIGN OFF DATE 01/18/09

Rev. Date: 5-18-98

	BY	CHECKED
DESIGN	M. Nader	C. Selm
DETAILS	G. Baker	J. Lopez-Jara
QUANTITIES	C. Mibelli	J. Lopez-Jara

PREPARED FOR THE STATE OF CALIFORNIA DEPARTMENT OF TRANSPORTATION

R. Manzanarez
PROJECT ENGINEER

BRIDGE NO. 34-0006L/R
KILOMETER POST 13.2/13.9

SAN FRANCISCO OAKLAND BAY BRIDGE
EAST SPAN SEISMIC SAFETY PROJECT
SELF-ANCHORED SUSPENSION BRIDGE
(SUPERSTRUCTURE & TOWER)

WIND VORTEX GENERATOR PLATES DETAILS

ORIGINAL SCALE IN MILLIMETERS FOR REDUCED PLANS 0 10 20 30 40 50 60 70 80 90 100

CU 04
EA 0120F1

DISREGARD PRINTS BEARING EARLIER REVISION DATES

REVISION DATES (PRELIMINARY STAGE ONLY) 04/08/02 07/24/02 12/19/02

SHEET 458R5 OF

100 % PS&E

DATE PLOTTED => 15 JAN 2009 TIME PLOTTED => 17:49:35

USERNAME => dwinrow

FILE -> I:\bb\04-012001\sas\contract plans and cco\cco\cco#103\revision 01-16-09\dgn\akwvg03.dgn