DIST.	COUNTY	ROUTE	KILOMETER POST TOTAL PROJECT	SHEET NO.	TOTAL SHEETS
04	SF	80	13.2/13.9	875R5	1204

REGISTERED ENGINEER - CIVIL

12-6-04
PLANS APPROVAL DATE

REGISTERED PROFESSIONAL ENGINEER Marwan N. Nader No. C 054426 Exp. 12/31/09 CIVIL STATE OF CALIFORNIA

The State of California or its officers or agents shall not be responsible for the accuracy or completeness of electronic copies of this plan sheet.

T.Y. LIN / MOFFATT & NICHOL
825 BATTERY STREET
SAN FRANCISCO, CA 94111

Caltrans now has a web site! To get to the web site, go to: http://www.dot.ca.gov

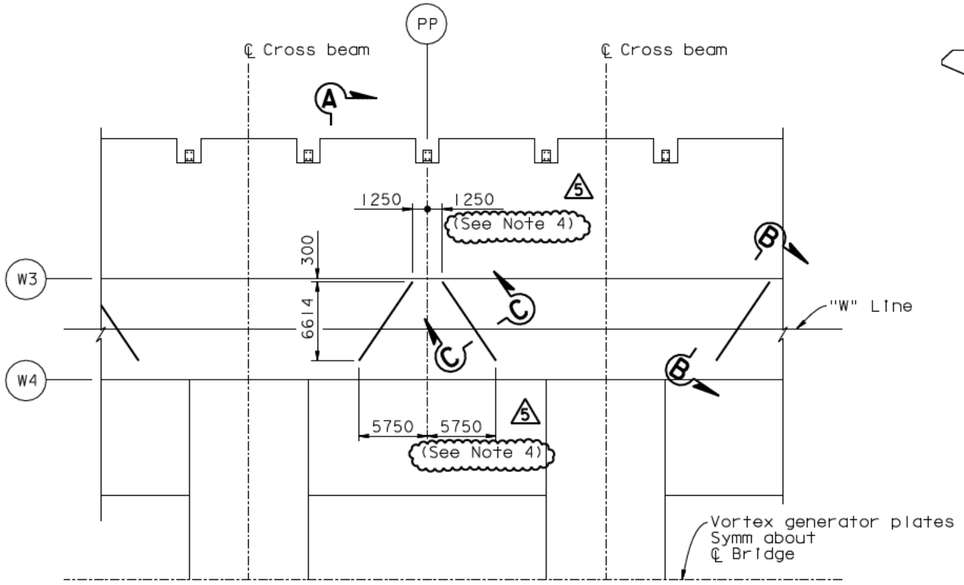

A DETAIL A
TYPICAL LAYOUT OF VORTEX GENERATOR PLATES
1:250
("W" Line shown, "E" Line similar)

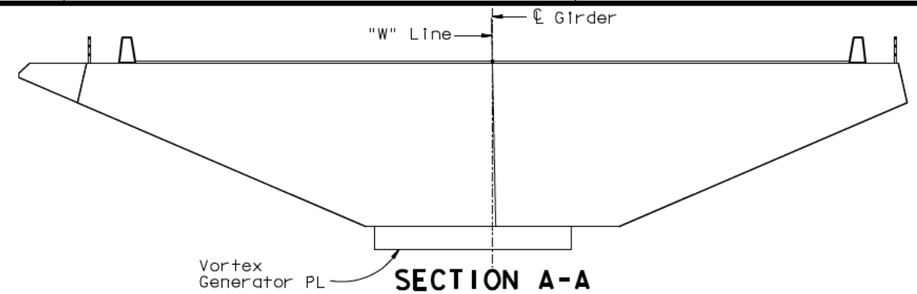

SECTION A-A
1:100

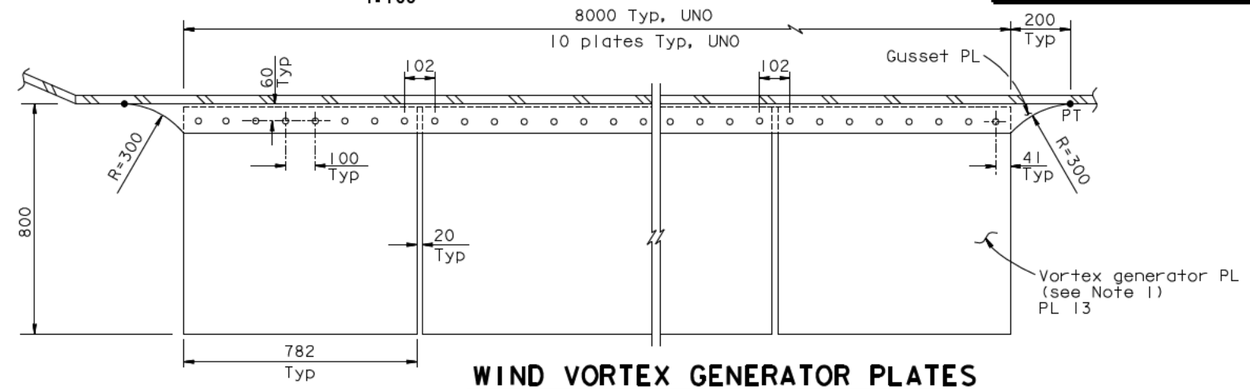

WIND VORTEX GENERATOR PLATES
VIEW B-B
1:10

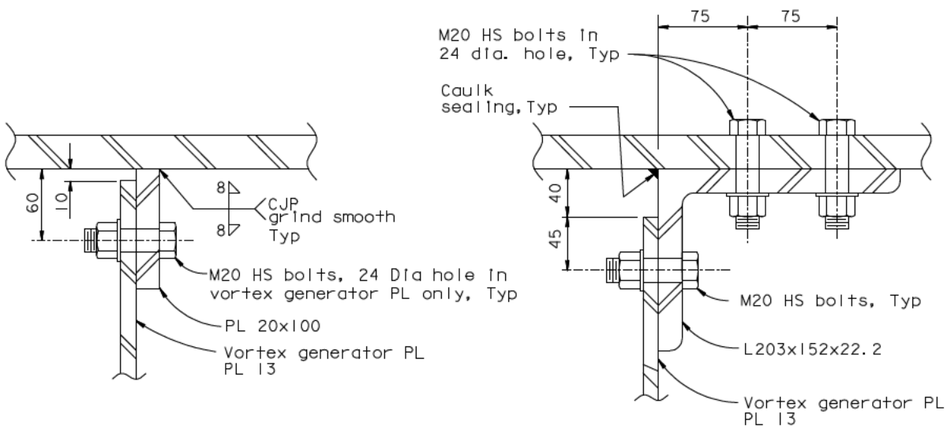

SECTION C-C
1:2.5

ALTERNATIVE
SECTION C-C
1:2.5

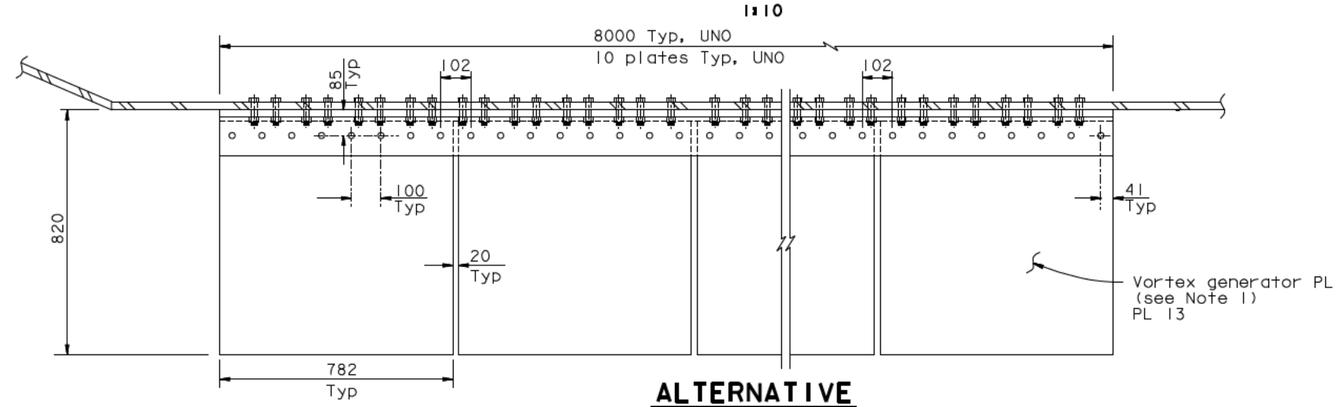

ALTERNATIVE
WIND VORTEX GENERATOR PLATES
VIEW B-B
1:10

NOTES:

1. A total of 704 vortex generator steel plates shall be fabricated and erected.
2. M20 HS bolts connecting L203x152x22.2 and box girder plate shall clear box girder stiffeners.
3. Installation of vortex generator steel plates shall not interfere with required clearances during construction of the bridge.
4. At PP 108 add 45 mm to the offset shown. (5)

ALL DIMENSIONS ARE IN MILLIMETERS UNLESS OTHERWISE SHOWN

CONTRACT CHANGE ORDER NO. ____
SHEET ___ OF ___

REQUESTS FOR INFORMATION NOT ADDRESSED IN THIS CCO REMAIN IN FORCE

MARK	DATE	DESCRIPTIONS	BY	CH'D	CCO#
5	01/16/09	BOX GIRDER AXIAL CAMBER	JD	MN	103
4	01/16/09	WIND VORTEX GENERATOR PLATES	GB	MN	26
3	07/07/08	CAULKING	AS	MN	66
2	08/31/07	WIND VORTEX GENERATOR PLATES	JD	MN	26
1	07/26/07	WIND VORTEX GENERATOR PLATES	CC	MN	26

REVISIONS

R. Vallizadeh/V. Toan/Y.L./W.L./F.C.
DESIGN OVERSIGHT
SIGN OFF DATE 01/18/09

Rev. Date: 5-18-98

	BY	CHECKED
DESIGN	M. Nader	C. Selm
DETAILS	G. Baker	J. Lopez-Jara
QUANTITIES	C. Mibelli	J. Lopez-Jara

PREPARED FOR THE STATE OF CALIFORNIA DEPARTMENT OF TRANSPORTATION

R. Manzanarez
PROJECT ENGINEER

BRIDGE NO. 34-0006L/R
KILOMETER POST 13.2/13.9

SAN FRANCISCO OAKLAND BAY BRIDGE
EAST SPAN SEISMIC SAFETY PROJECT
SELF-ANCHORED SUSPENSION BRIDGE
(SUPERSTRUCTURE & TOWER)

WIND VORTEX GENERATOR PLATES DETAILS

ORIGINAL SCALE IN MILLIMETERS FOR REDUCED PLANS 0 10 20 30 40 50 60 70 80 90 100

CU 04
EA 0120F1

DISREGARD PRINTS BEARING EARLIER REVISION DATES

REVISION DATES (PRELIMINARY STAGE ONLY) 04/08/02 07/24/02 12/19/02

SHEET 458R5 OF

100 % PS&E

DATE PLOTTED => 15 JAN 2009 TIME PLOTTED => 17:49:35

USERNAME => dwinrow

FILE -> I:\bb\04-012001\sas\contract plans and cco\cco\cco#103\revision 01-16-09\dgn\akwvg03.dgn