DIST.	COUNTY	ROUTE	KILOMETER POST TOTAL PROJECT	SHEET NO.	TOTAL SHEETS
04	SF	80	13.2/13.9	645SIRI	1204

Caltrans Metric

REGISTERED ENGINEER - CIVIL

12-6-04

PLANS APPROVAL DATE

REGISTERED PROFESSIONAL ENGINEER Marwan N. Nader No. C 054426 Exp. 12/31/09 CIVIL STATE OF CALIFORNIA

The State of California or its officers or agents shall not be responsible for the accuracy or completeness of electronic copies of this plan sheet.

T.Y. LIN / MOFFATT & NICHOL
825 BATTERY STREET
SAN FRANCISCO, CA 94111

Caltrans now has a web site! To get to the web site, go to: http://www.dot.ca.gov

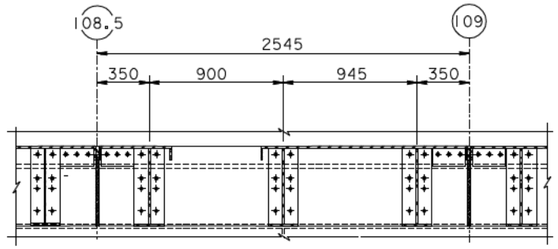

PLAN-STEEL BARRIER
1:20

Type 732 Modified for (W5) (E2)

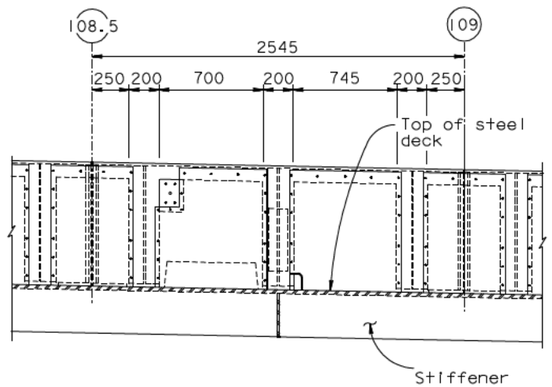

BARRIER SECTION
1:20

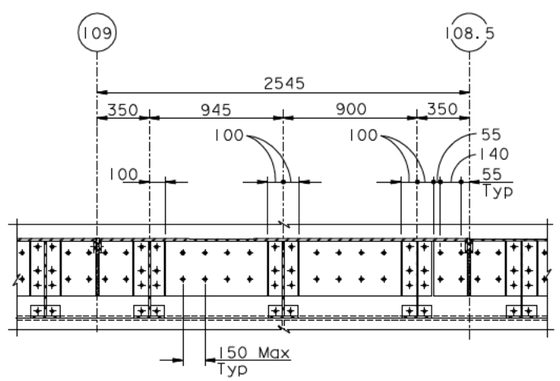

PLAN-STEEL BARRIER
1:20

Type 732 Modified for (W2) (E5)

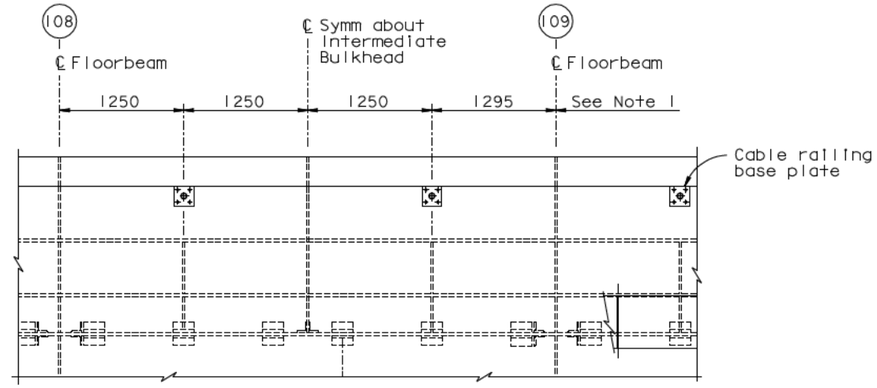

TYPICAL GIRDER DETAILS
PLAN
("W" Line shown, "E" Line similar)
1:30

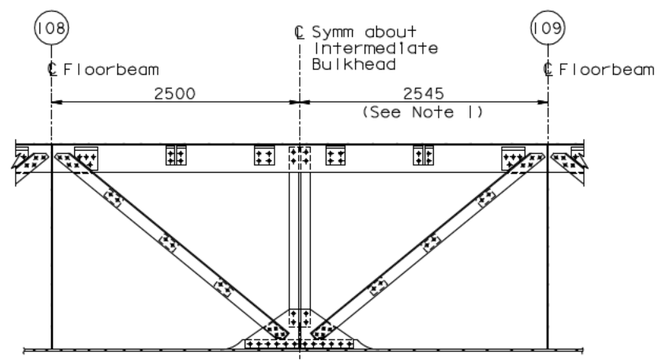

TYPICAL GIRDER DETAILS
ELEVATION
LONGITUDINAL TRUSS
("W" Line Shown, "E" Line Similar)
1:30

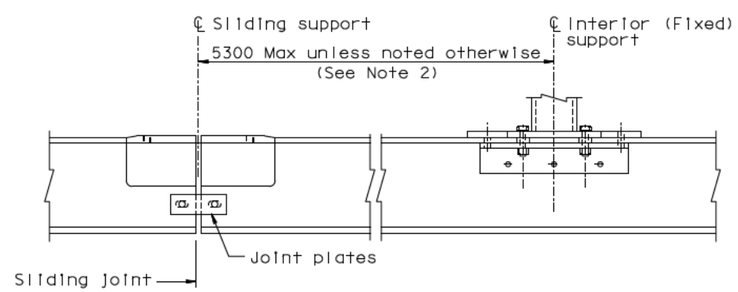

TRAVELER RAIL TYPICAL FABRICATION
1:10

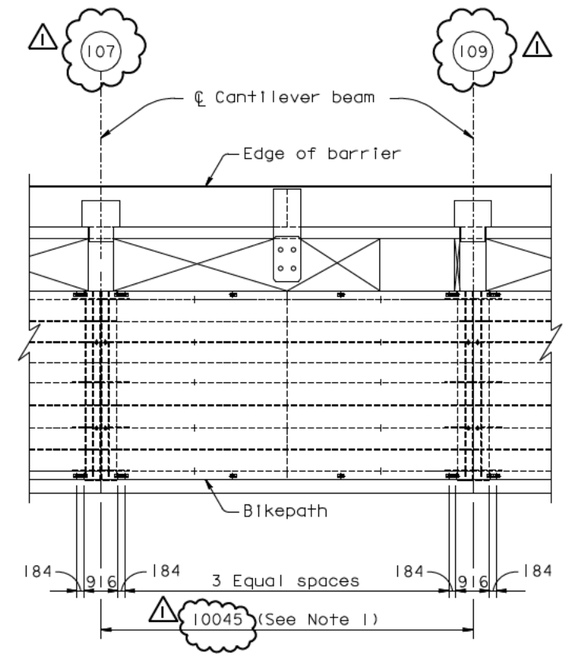

BIKEPATH FRAMING PLAN
1:80

NOTES:

1. Dimensions shown are the final horizontal erected girder dimensions.
2. The final erected girder dimension between PP 108 & PP 109 is 5045.

CONTRACT CHANGE ORDER NO. ____
SHEET ___ OF ___

REQUESTS FOR INFORMATION NOT ADDRESSED IN THIS CCO REMAIN IN FORCE

ALL DIMENSIONS ARE IN MILLIMETERS UNLESS OTHERWISE SHOWN

R. Valizadeh/V. Toan/Y.L./W.L./F.C.
DESIGN OVERSIGHT
SIGN OFF DATE 04/03/09

MARK	DATE	DESCRIPTIONS	BY	CH'D	CCO#
1	04/03/09	BOX GIRDER AXIAL CAMBER	GB	MN	103
0	01/16/09	BOX GIRDER AXIAL CAMBER	GB	MN	103

REVISIONS

DESIGN	BY G. Baker	CHECKED M. Nader
DETAILS	BY G. Baker	CHECKED M. Nader
QUANTITIES	BY G. Baker	CHECKED M. Nader

PREPARED FOR THE STATE OF CALIFORNIA DEPARTMENT OF TRANSPORTATION

R. Manzanarez
PROJECT ENGINEER

BRIDGE NO. 34-0006L/R
KILOMETER POST 13.2/13.9

SAN FRANCISCO OAKLAND BAY BRIDGE
EAST SPAN SEISMIC SAFETY PROJECT
SELF-ANCHORED SUSPENSION BRIDGE
(SUPERSTRUCTURE & TOWER)

CAMBER SCHEDULE-C

Rev. Date: 5-18-98

ORIGINAL SCALE IN MILLIMETERS FOR REDUCED PLANS 0 10 20 30 40 50 60 70 80 90 100

CU 04
EA 0120F1

DISREGARD PRINTS BEARING EARLIER REVISION DATES 01/16/09

REVISION DATES (PRELIMINARY STAGE ONLY)

SHEET 228SIRI OF

FILE -> I:\bb\04-012001\sas\contract plans and cco\cco\cco*103\revison 04-03-09\dgn\akbar01s01.dgn

USERNAME => dwinrow DATE PLOTTED => 07 APR 2009 TIME PLOTTED => 09:02:42