DIST.	COUNTY	ROUTE	KILOMETER POST TOTAL PROJECT	SHEET NO.	TOTAL SHEETS
04	SF	80	13.2/13.9	1155S1	1204

REGISTERED ENGINEER - CIVIL

03-04-11
PLANS APPROVAL DATE

REGISTERED PROFESSIONAL ENGINEER Tien Hung Ho No. C 43990 Exp. 06/30/11 CIVIL STATE OF CALIFORNIA

The State of California or its officers or agents shall not be responsible for the accuracy or completeness of electronic copies of this plan sheet.

T.Y. LIN / MOFFATT & NICHOL
825 BATTERY STREET
SAN FRANCISCO, CA 94111

Caltrans now has a web site! To get to the web site, go to: http://www.dot.ca.gov

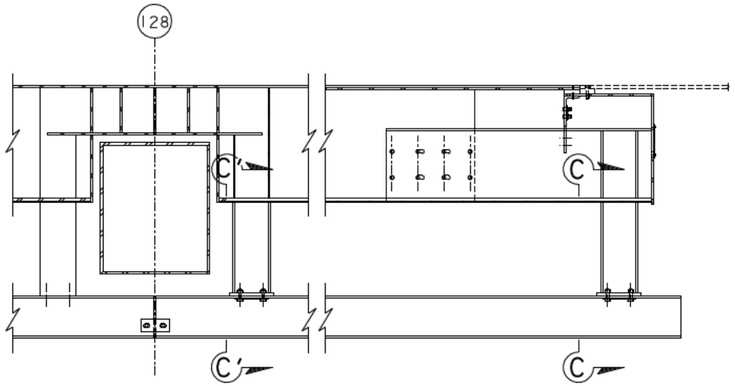

SECTION A'-A'
1:20

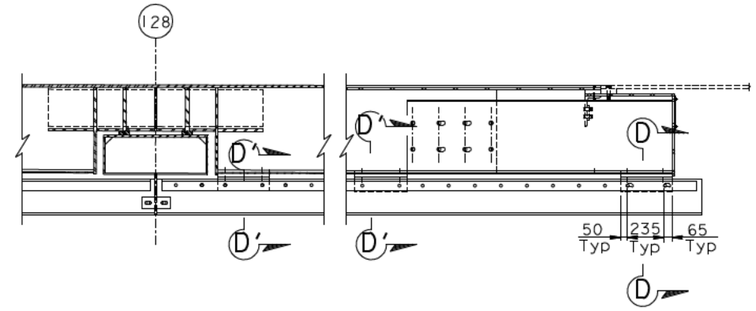

SECTION B'-B'
1:20

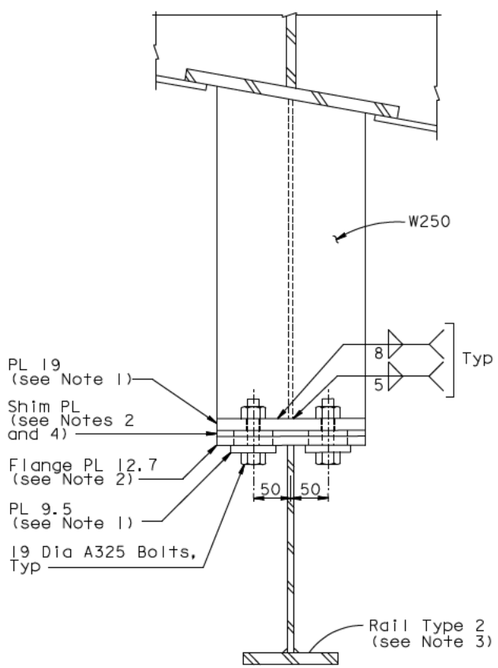

SECTION C-C (Section C'-C' Similar)
1:5

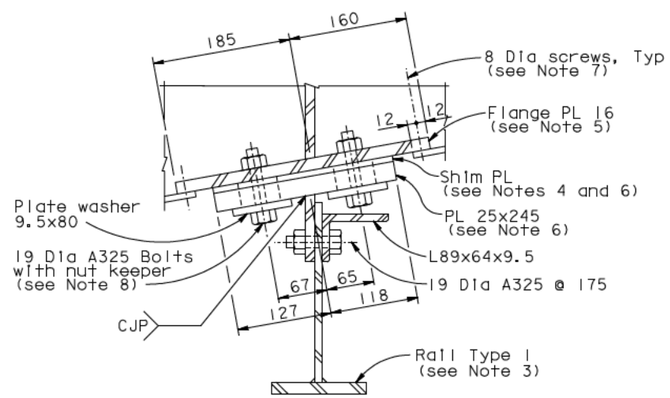

SECTION D-D (Section D'-D' Similar, see Note 7)
(Nut keeper not shown for clarity)
1:5

NOTES:

1. Pre-drill standard holes in flange PL 19 & PL 9.5
2. Pre-drill long slot holes in shim PL & flange PL 12.7.
3. Bolted alternative provides a maximum of ±15 mm transverse field adjustment for the rail.
4. The Contractor may provide optional shim PL to achieve rail alignment with skyway.
5. Pre-drill standard holes in flange PL 16.
6. Pre-drill long slot holes in PL 24x245 & shim PL.
7. 8 Dia screws at Section D-D only. Typical weld at Section D'-D'.
8. For Nut Keeper Detail, see "West Jacking Frame Details No.1" sheet.

CONTRACT CHANGE ORDER NO. ____
SHEET ____ OF ____

REQUESTS FOR INFORMATION NOT ADDRESSED IN THIS CCO REMAIN IN FORCE

ALL DIMENSIONS ARE IN MILLIMETERS UNLESS OTHERWISE SHOWN

R. Vallizadeh/V. Toan/Y.L./W.L./F.C.
DESIGN OVERSIGHT
SIGN OFF DATE 03/04/11

MARK	DATE	DESCRIPTIONS	BY	CH'D	CCO#
0	03/04/11	BIKEPATH DETAILS	RB	TH	99

REVISIONS

DESIGN	BY R. Boundouki	CHECKED T. Ho	
DETAILS	BY R. Boundouki	CHECKED T. Ho	
QUANTITIES	BY R. Boundouki	CHECKED T. Ho	

PREPARED FOR THE STATE OF CALIFORNIA DEPARTMENT OF TRANSPORTATION

R. Manzanarez
PROJECT ENGINEER

BRIDGE NO. 34-0006L/R
KILOMETER POST 13.2/13.9

SAN FRANCISCO OAKLAND BAY BRIDGE
EAST SPAN SEISMIC SAFETY PROJECT
SELF-ANCHORED SUSPENSION BRIDGE
(SUPERSTRUCTURE & TOWER)

E2/E3 BIKEPATH TRAVELER RAILS-03A

Rev. Date: 5-18-98

ORIGINAL SCALE IN MILLIMETERS FOR REDUCED PLANS 0 10 20 30 40 50 60 70 80 90 100

CU 04
EA 0120F1

DISREGARD PRINTS BEARING EARLIER REVISION DATES 03/04/11

REVISION DATES (PRELIMINARY STAGE ONLY)

SHEET 738S1 OF

FILE -> L:\BB\04-012001\SAS\Contract Plans and CCO\CCO\CCO#99\16-Revision 03-04-11\DGN\aktrv136a.dgn

100 % PS&E

USERNAME -> DWinrow DATE PLOTTED -> 04 MAR 2011 TIME PLOTTED -> 10:35:06