DIST.	COUNTY	ROUTE	KILOMETER POST TOTAL PROJECT	SHEET NO.	TOTAL SHEETS
04	SF	80	13.2/13.9	1155R4	1204

Caltrans Metric

REGISTERED ENGINEER - CIVIL

12-6-04
PLANS APPROVAL DATE

Rafael Manzanarez
REGISTERED PROFESSIONAL ENGINEER
No. C 36842
Exp. 6/30/12
CIVIL
STATE OF CALIFORNIA

The State of California or its officers or agents shall not be responsible for the accuracy or completeness of electronic copies of this plan sheet.

T.Y. LIN / MOFFATT & NICHOL
825 BATTERY STREET
SAN FRANCISCO, CA 94111

Caltrans now has a web site! To get to the web site, go to: http://www.dot.ca.gov

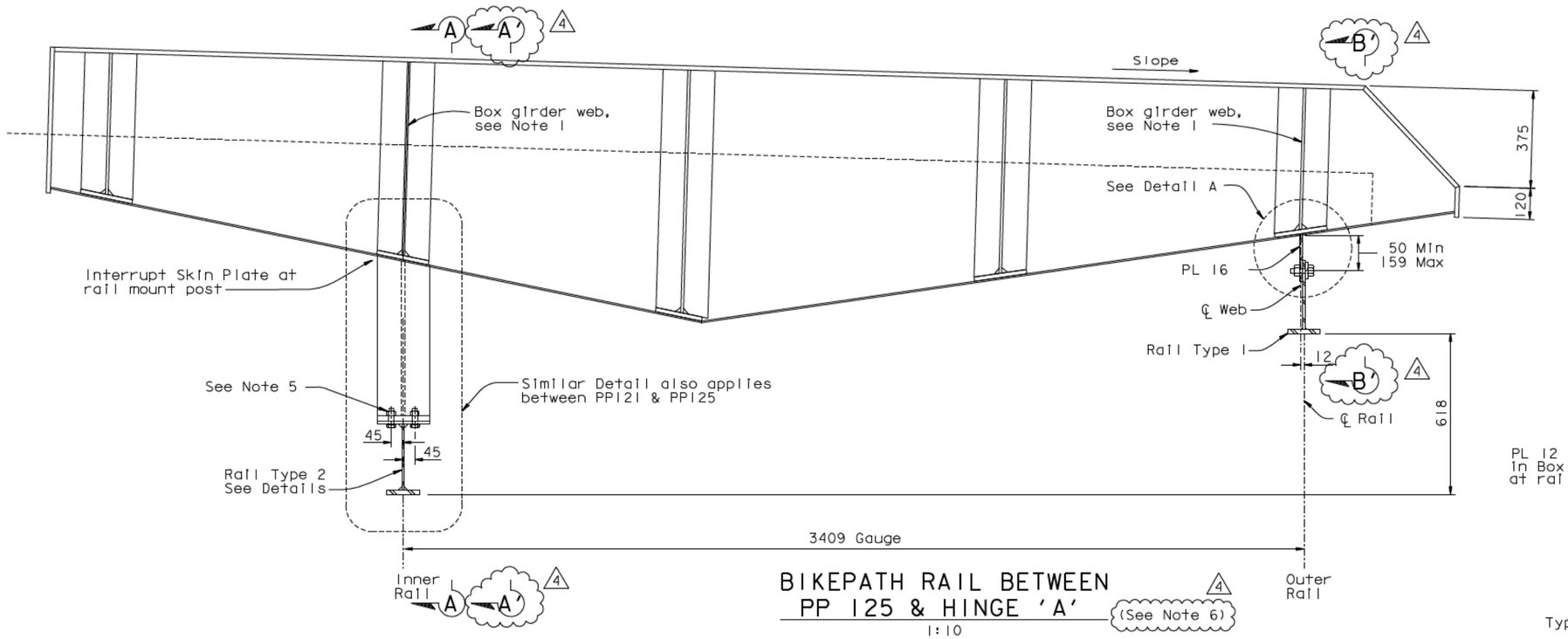

BIKEPATH RAIL BETWEEN PP 125 & HINGE 'A'

1:10

(See Note 6)

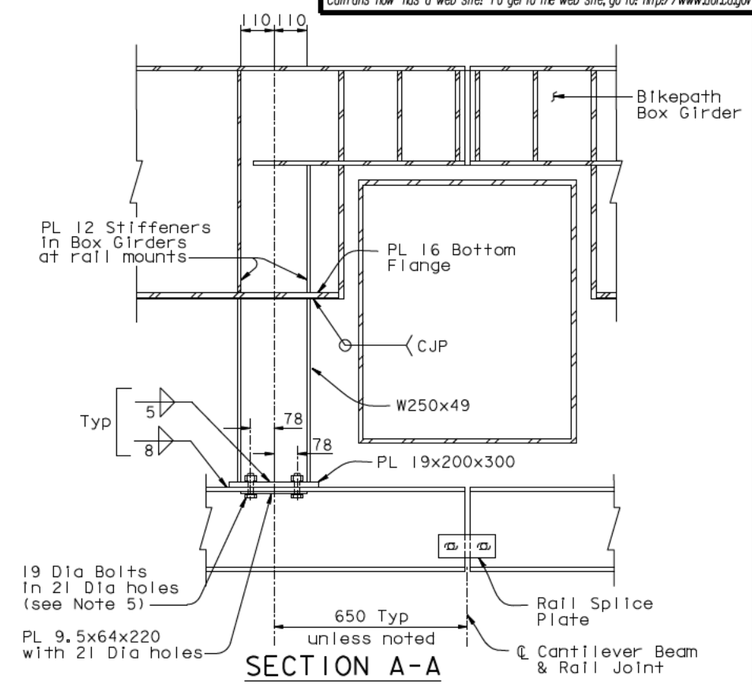

SECTION A-A

AT CANTILEVER BEAMS

1:10

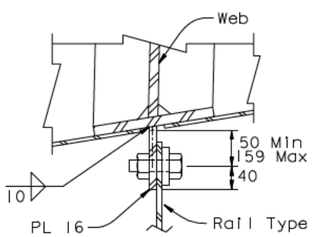

DETAIL A

1:5

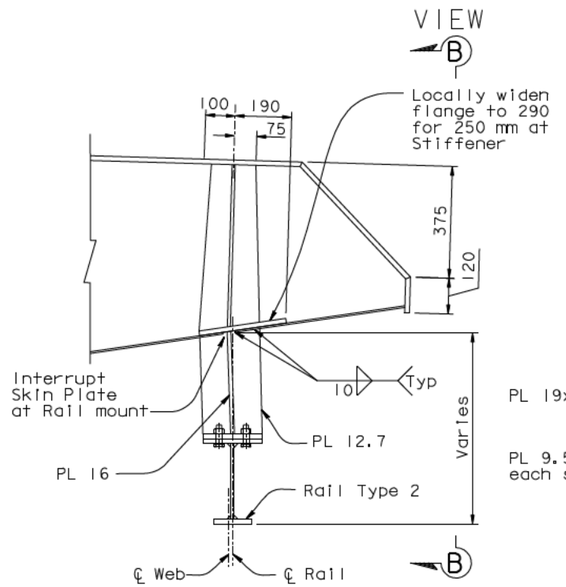

OUTER RAIL BETWEEN PP 121 & PP 125

1:10

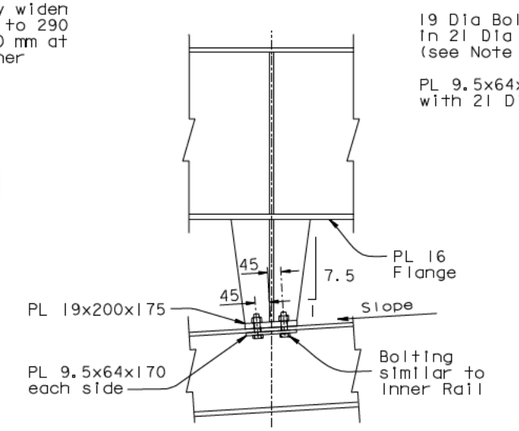

VIEW B-B

1:10

NOTES:

1. Locate webs in Box Girders to suit rail locations as shown.
2. For additional connection details, see "Bikepath Details No.3" sheet.
3. For Rail Layouts, see "E2/E3 Bikepath Traveler Rails-01" sheet.
4. For Rail Type 1 & 2 Details, see "E2/E3 Bikepath Traveler Rails-02" sheet.
5. At Sliding(S) Mounting: A325 bolt with SAE J429 Grade 5 heavy hex locknut (TRI-LOC Top Lock Locknut), snug tightened to 20 Ft-lbs torque. At Fixed(F) Mounting: A325 bolt with heavy hex nut, fully tensioned.
6. At the Contractor's option, Sections A'-A' and B'-B' may be used. See "E2/E3 Bikepath Traveler Rails-03A" sheet. (4)

REVISION 3 SUPERSEDES REVISIONS 1 & 2

CONTRACT CHANGE ORDER NO. _____
SHEET ____ OF ____

REQUESTS FOR INFORMATION NOT ADDRESSED IN THIS CCO REMAIN IN FORCE

MARK	DATE	DESCRIPTIONS	BY	CH'D	CCO#
4	03/11/11	BIKEPATH DETAILS	RM	CC	99
3	05/18/09	TRAVELER RAIL MODIFICATIONS	RM	NV	24S0
2	07/20/07	RAIL CHANGE & MISCELLANEOUS DETAILS	RM	JD	24
1	08/04/06	TRAVELER RAILS	RM	NV	24

REVISIONS

ALL DIMENSIONS ARE IN MILLIMETERS UNLESS OTHERWISE SHOWN

R. Vallizadeh/V. Toan/Y.L./W.L./F.C.
DESIGN OVERSIGHT
SIGN OFF DATE 03/11/11

	BY	CHECKED
DESIGN	J. Otter	R. Manzanarez
DETAILS	J. Otter	J. Leventini
QUANTITIES	J. Otter	J. Leventini

PREPARED FOR THE STATE OF CALIFORNIA DEPARTMENT OF TRANSPORTATION

R. Manzanarez
PROJECT ENGINEER

BRIDGE NO. 34-0006L/R
KILOMETER POST 13.2/13.9

SAN FRANCISCO OAKLAND BAY BRIDGE
EAST SPAN SEISMIC SAFETY PROJECT
SELF-ANCHORED SUSPENSION BRIDGE
(SUPERSTRUCTURE & TOWER)

E2/E3 BIKEPATH TRAVELER RAILS-03

Rev. Date: 5-18-98

ORIGINAL SCALE IN MILLIMETERS FOR REDUCED PLANS 0 10 20 30 40 50 60 70 80 90 100

CU 04
EA 0120F1

DISREGARD PRINTS BEARING EARLIER REVISION DATES

REVISION DATES (PRELIMINARY STAGE ONLY) 04/18/02 07/01/02 12/19/02

SHEET 738R4 OF

100 % PS&E

USERNAME -> DWinrow DATE PLOTTED -> 11 MAR 2011 TIME PLOTTED -> 10:31:59

FILE -> L:\BB\04-012001\SAS\Contract Plans and CCO\CCO\CCO#99\17-Revision 03-11-11\DGN\aktrv136.dgn