DIST.	COUNTY	ROUTE	KILOMETER POST TOTAL PROJECT	SHEET NO.	TOTAL SHEETS
04	SF	80	13.2/13.9	1154R5	1204

Caltrans Metric

REGISTERED ENGINEER - CIVIL

12-6-04
PLANS APPROVAL DATE

REGISTERED PROFESSIONAL ENGINEER Rafael Manzanarez No. C 36842 Exp. 6/30/12 CIVIL STATE OF CALIFORNIA

The State of California or its officers or agents shall not be responsible for the accuracy or completeness of electronic copies of this plan sheet.

T.Y. LIN / MOFFATT & NICHOL
825 BATTERY STREET
SAN FRANCISCO, CA 94111

Caltrans now has a web site! To get to the web site, go to: http://www.dot.ca.gov

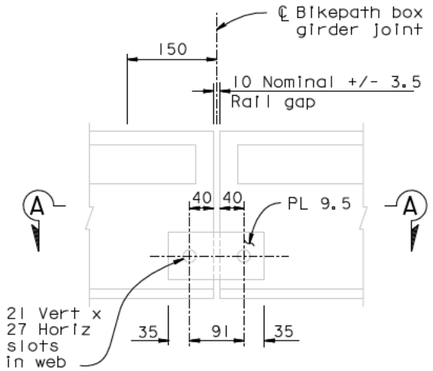

ELEVATION
Rail Type 1 on Skyway
(By Others)

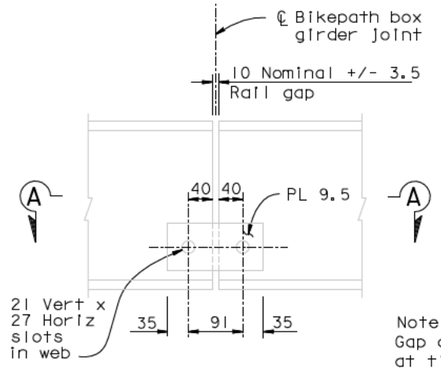

ELEVATION
Rail Type 2 on Skyway
(By Others)

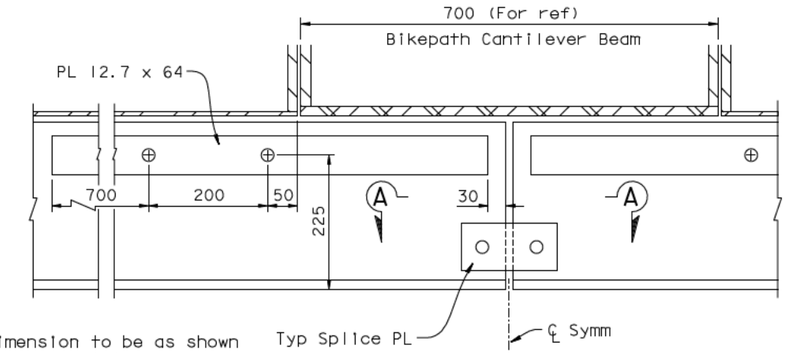

Note:
Gap dimension to be as shown at time of installation.
Gap will vary +/- 3 mm per 8000 span due to flexure etc. of steel superstructure. Set gap as shown unless noted otherwise in rail layouts.

RAIL SPLICE
1:5

ELEVATION
Rail Type 1 on SAS

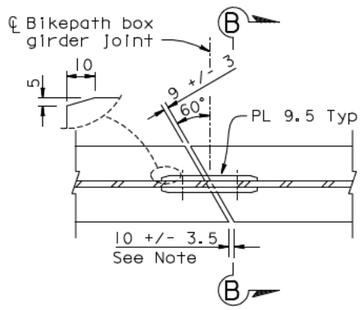

SECTION A-A
1:5

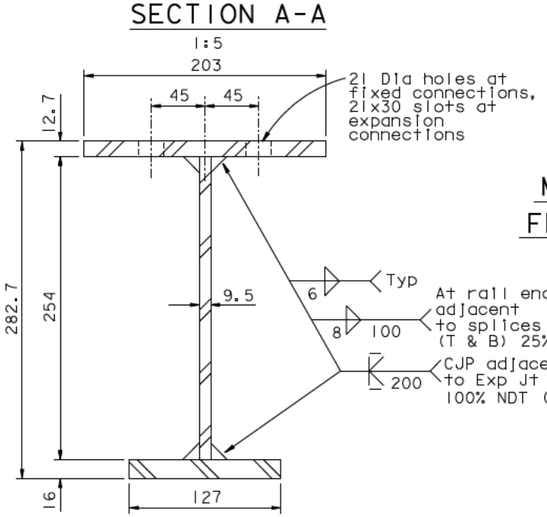

RAIL TYPE 2
1:2.5

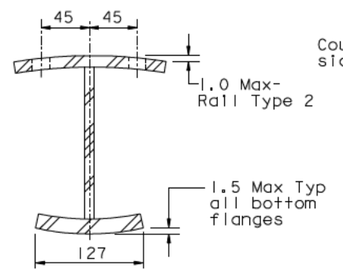

MAXIMUM ALLOWABLE FLANGE DEFORMATIONS
NTS

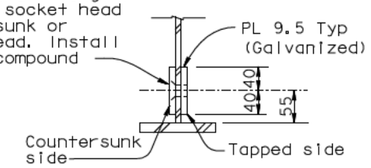

SECTION B-B
1:5

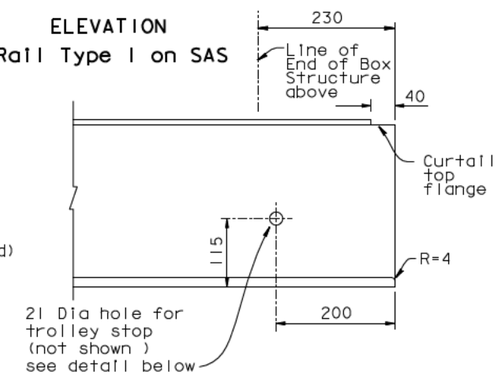

RAIL TYPE 2 AT HINGE A
1:5

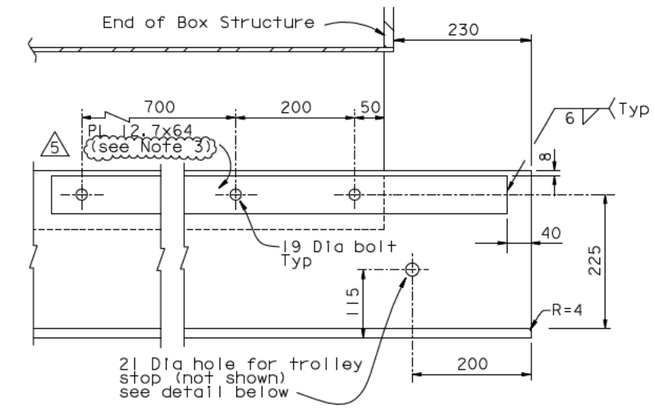

RAIL TYPE 1 AT HINGE A
1:5

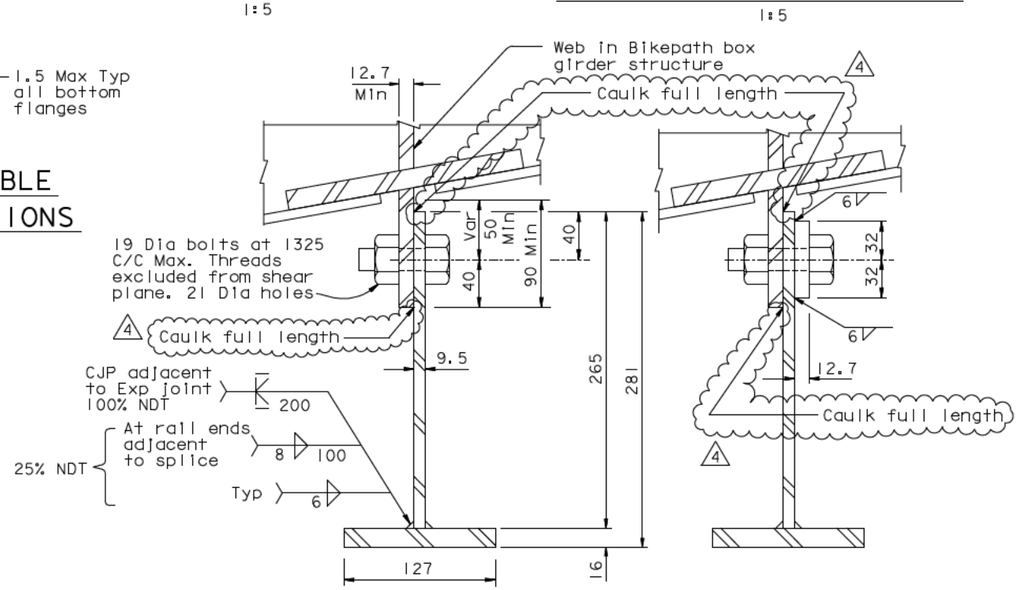

TYP SECTION

SECTION WITH PL 12.7
5 (See Note 3)

ALL DIMENSIONS ARE IN MILLIMETERS UNLESS OTHERWISE SHOWN

RAIL TYPE 1
1:2.5

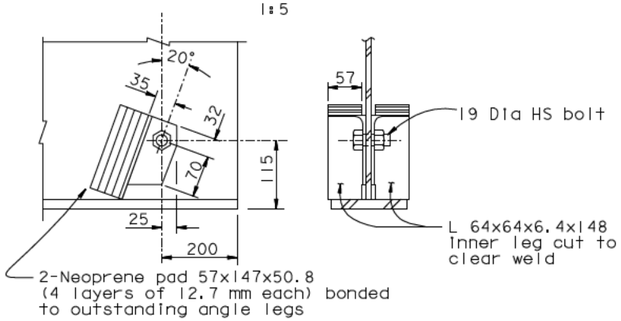

TROLLEY STOP DETAIL
1:5

Note: Install trolley stops at both sides of each expansion joint and at rail terminations

NOTES:

1. Rail & other noted material to be hot dipped galvanized.
2. Materials -
   Rails - All steel - ASTM A572 Grade 50. (Fy=345 MPa)
   - All other plates and shapes - ASTM A572 Grade 40.
   - (Fy = 275) Min
3. At the outer rail transition curves at PP121 and PP128, the PL 12.7x64 shall be increased to PL 16x64. (5)

CONTRACT CHANGE ORDER NO. ____
SHEET ___ OF ___

REQUESTS FOR INFORMATION NOT ADDRESSED IN THIS CCO REMAIN IN FORCE

MARK	DATE	DESCRIPTIONS	BY	CH'D	CCO#
5	08/20/10	BIKEPATH DETAILS	RM	CC	99
4	09/25/09	BIKEPATH DETAILS	RM	HT	99
3	05/18/09	TRAVELER RAIL MODIFICATIONS	RM	NV	24S0
2	07/20/07	RAIL CHANGE & MISCELLANEOUS DETAILS	RM	NV	24
1	08/04/06	TRAVELER RAILS	RM	NV	24

REVISIONS

R. Vallzadeh/V. Toan/Y.L./W.L./F.C.
DESIGN OVERSIGHT
Roya Valizadeh / Vong Toan / Y. Liu
SIGN OFF DATE 08/20/10

Rev. Date: 5-18-98

	BY	CHECKED
DESIGN	J. Otter	R. Manzanarez
DETAILS	J. Otter	J. Leventini
QUANTITIES	J. Otter	J. Leventini

PREPARED FOR THE STATE OF CALIFORNIA DEPARTMENT OF TRANSPORTATION

R. Manzanarez
PROJECT ENGINEER

BRIDGE NO. 34-0006L/R
KILOMETER POST 13.2/13.9

SAN FRANCISCO OAKLAND BAY BRIDGE
EAST SPAN SEISMIC SAFETY PROJECT
SELF-ANCHORED SUSPENSION BRIDGE
(SUPERSTRUCTURE & TOWER)

E2/E3 BIKEPATH TRAVELER RAILS-02

ORIGINAL SCALE IN MILLIMETERS FOR REDUCED PLANS 0 10 20 30 40 50 60 70 80 90 100

CU 04
EA 0120F1

DISREGARD PRINTS BEARING EARLIER REVISION DATES 04/18/02 07/24/02 12/19/02

SHEET 737R5 OF

FILE -> I:\bb\04-01200I\sas\contract plans and cco\cco\cco#99\13-revision 08-20-10\dgn\aktrv135.dgn

USERNAME -> dwinrow DATE PLOTTED -> 20 AUG 2010 TIME PLOTTED -> 11:35:00

100% PS&E