DIST.	COUNTY	ROUTE	KILOMETER POST TOTAL PROJECT	SHEET NO.	TOTAL SHEETS
04	SF	80	13.2/13.9	902R2	1204

Caltrans Metric

REGISTERED ENGINEER - CIVIL

12-6-04
PLANS APPROVAL DATE

REGISTERED PROFESSIONAL ENGINEER Tien Hung Ho No. C 43990 Exp. 06/30/09 CIVIL STATE OF CALIFORNIA

The State of California or its officers or agents shall not be responsible for the accuracy or completeness of electronic copies of this plan sheet.

T.Y. LIN / MOFFATT & NICHOL
825 BATTERY STREET
SAN FRANCISCO, CA 94111

Caltrans now has a web site! To get to the web site, go to: http://www.dot.ca.gov

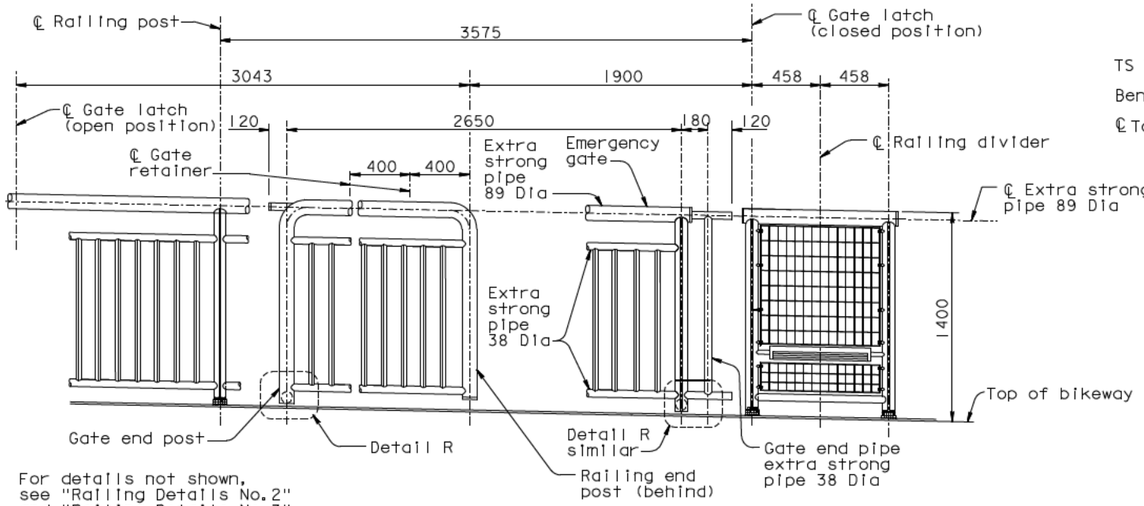

For details not shown, see "Railing Details No. 2" and "Railing Details No. 3" sheets

ELEVATION - EMERGENCY GATE
1:20

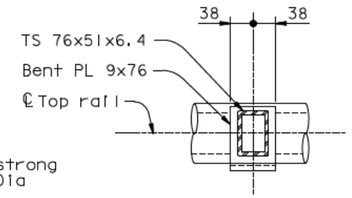

SECTION B-B
1:5

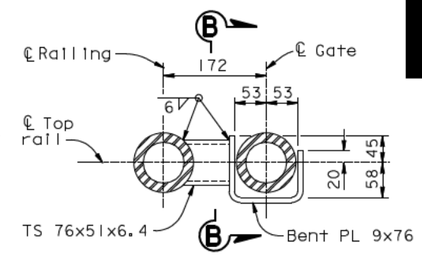

GATE RETAINER
SECTION A-A
1:5

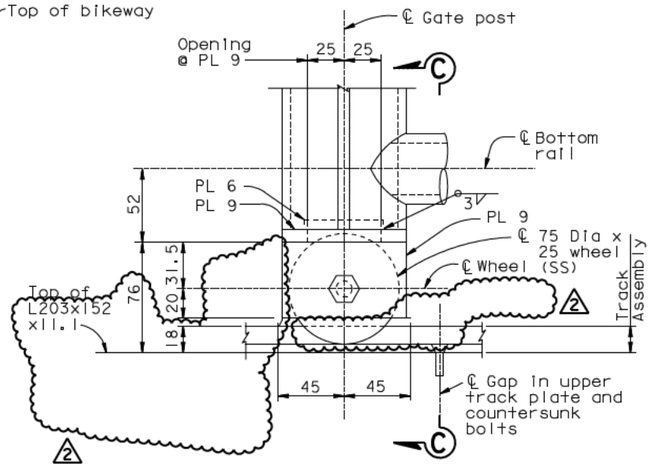

DETAIL R
1:2

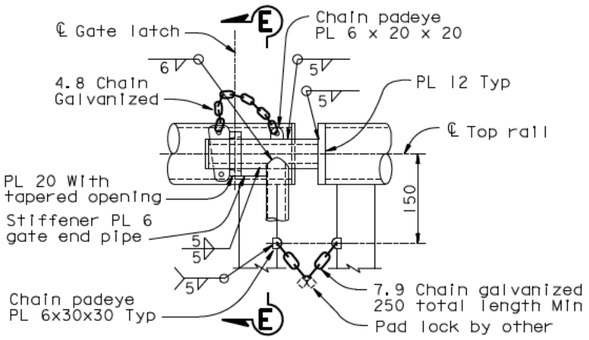

SECTION D-D
1:5

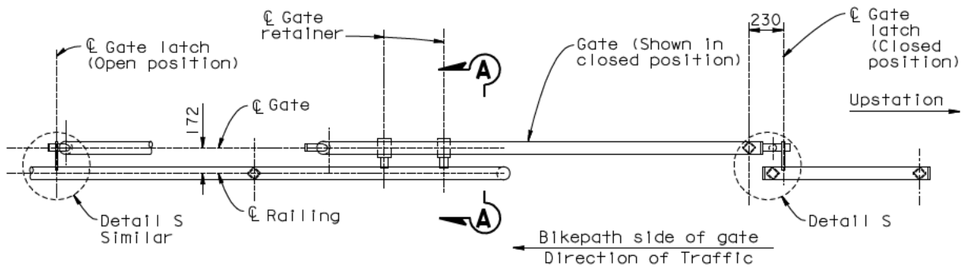

PLAN AT TOP RAIL
1:20

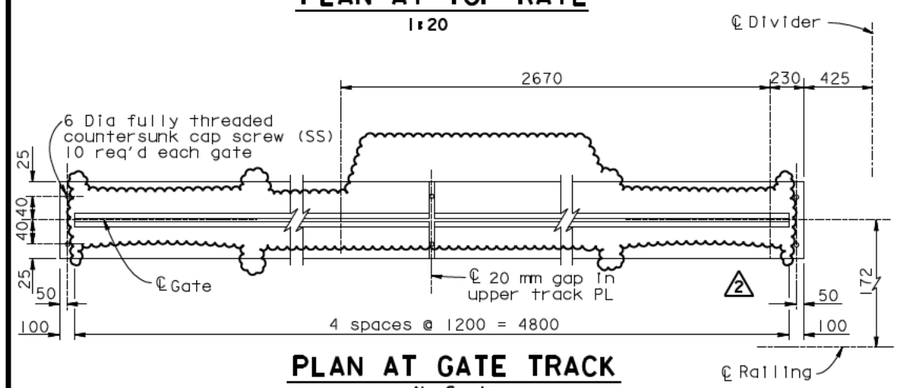

PLAN AT GATE TRACK
No Scale

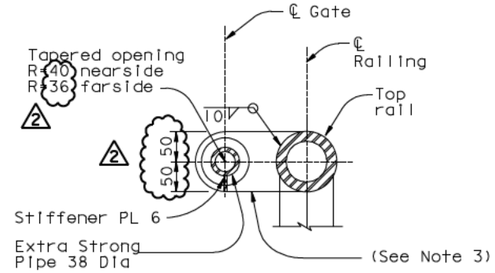

SECTION E-E
1:5

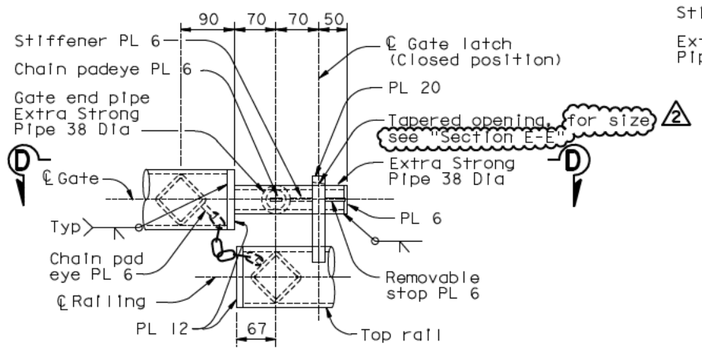

DETAIL S
1:5

NOTES:

1. Stainless steel wheel and stainless steel plates are A240 Type 410.
2. For Section C-C, see "Railing Details No. 5A" sheet.
3. If required, remove and reorient PL 20 to ensure proper fit-up of top rail of emergency gate. Ensure that PL 20 is welded to the pipe with 10 mm all around.

CONTRACT CHANGE ORDER NO. ____
SHEET ___ OF ___

REQUESTS FOR INFORMATION NOT ADDRESSED IN THIS CCO REMAIN IN FORCE

ALL DIMENSIONS ARE IN MILLIMETERS UNLESS OTHERWISE SHOWN

R. Vallzadeh/V. Toan/Y.L./W.L./F.C.
DESIGN OVERSIGHT
Ryan Vallzadeh / Vong Toan / Y. Liu
SIGN OFF DATE 01/30/09

MARK	DATE	DESCRIPTIONS	BY	CH'D	CCO#
2	01/30/09	BIKEPATH DETAILS	TH	MN	99
1	11/26/08	BIKEPATH DETAILS	TH	MN	99

REVISIONS

	BY	CHECKED
DESIGN	T. Ho	C. Redfield
DETAILS	R. Xu	C. Redfield
QUANTITIES	G. Baker	K. Cormier

PREPARED FOR THE STATE OF CALIFORNIA DEPARTMENT OF TRANSPORTATION

R. Manzanarez
PROJECT ENGINEER

BRIDGE NO. 34-0006L/R
KILOMETER POST 13.2/13.9

SAN FRANCISCO OAKLAND BAY BRIDGE
EAST SPAN SEISMIC SAFETY PROJECT
SELF-ANCHORED SUSPENSION BRIDGE
(SUPERSTRUCTURE & TOWER)

RAILING DETAILS NO. 5

Rev. Date: 5-18-98

ORIGINAL SCALE IN MILLIMETERS FOR REDUCED PLANS 0 10 20 30 40 50 60 70 80 90 100

CU 04
EA 0120F1

DISREGARD PRINTS BEARING EARLIER REVISION DATES

REVISION DATES (PRELIMINARY STAGE ONLY) 05/24/01 04/08/02 07/24/02 12/19/02 11/13/05

SHEET 485R2 OF

FILE -> I:\bb\04-012001\sas\contract plans and cco\cco\cco#99\revision 01-30-09\dgn\akrlg08.dgn

100% PS&E

USERNAME => tmartarel DATE PLOTTED => 30 JAN 2009 TIME PLOTTED => 14:09:31