DIST.	COUNTY	ROUTE	KILOMETER POST TOTAL PROJECT	SHEET NO.	TOTAL SHEETS
04	SF	80	13.2/13.9	900R4	1204

REGISTERED ENGINEER - CIVIL

12-6-04
PLANS APPROVAL DATE

REGISTERED PROFESSIONAL ENGINEER Tien Hung Ho No. C 43990 Exp. 6/30/11 CIVIL STATE OF CALIFORNIA

The State of California or its officers or agents shall not be responsible for the accuracy or completeness of electronic copies of this plan sheet.

T.Y. LIN / MOFFATT & NICHOL
825 BATTERY STREET
SAN FRANCISCO, CA 94111

Caltrans now has a web site! To get to the web site, go to: http://www.dot.ca.gov

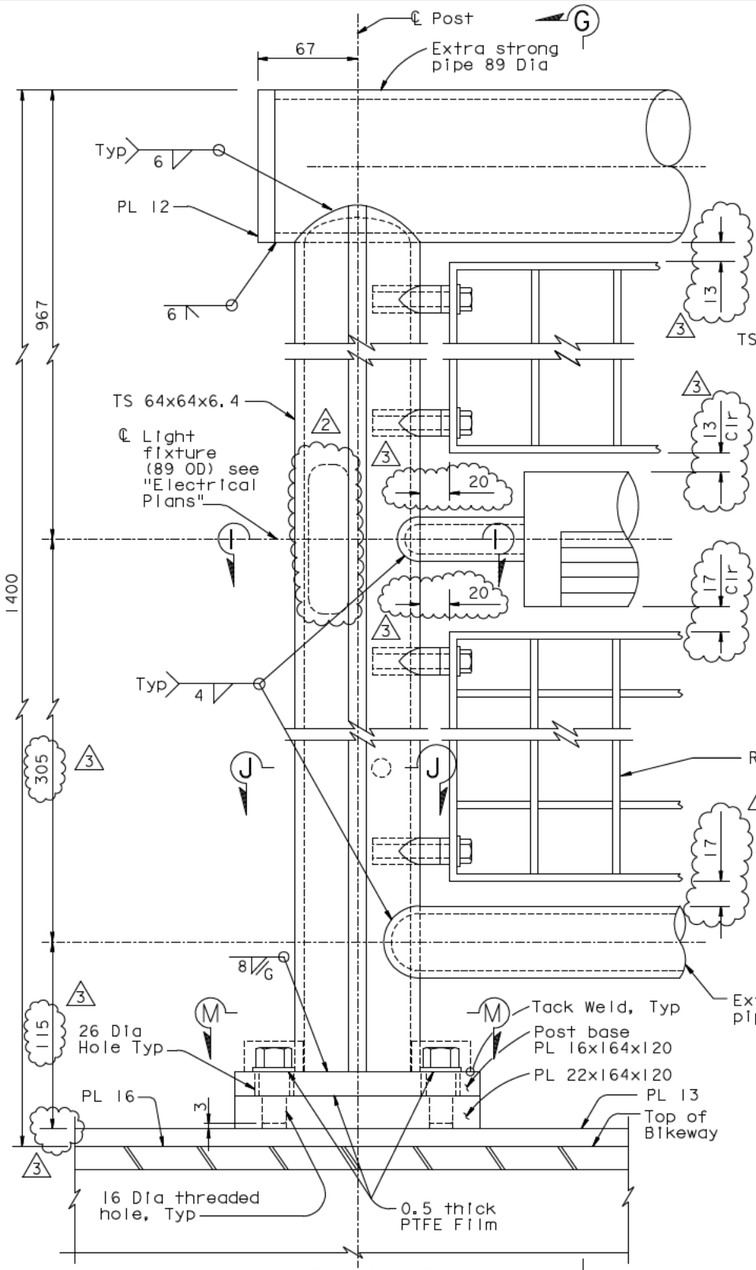

DETAIL F
1:2

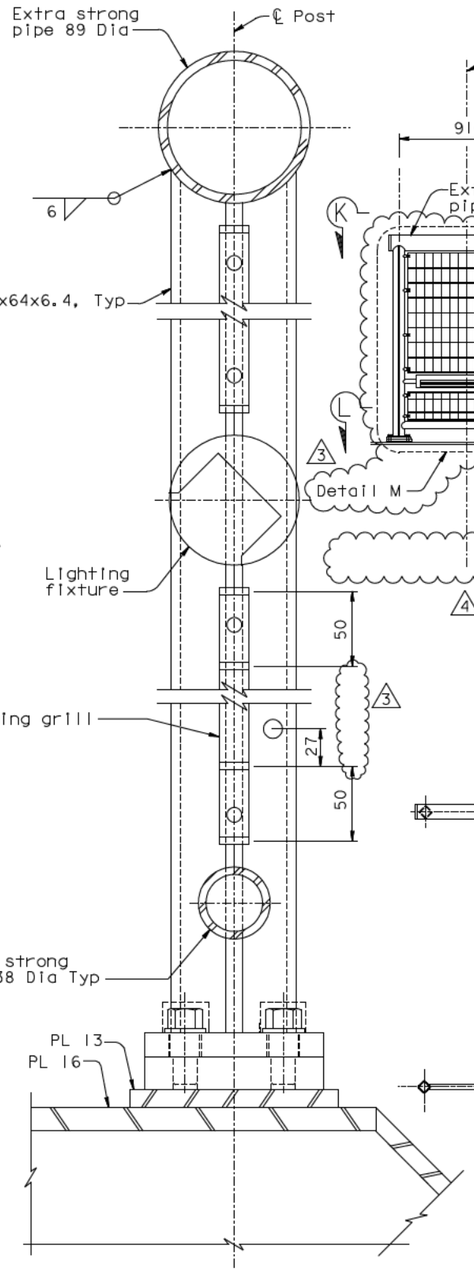

SECTION G-G
1:2

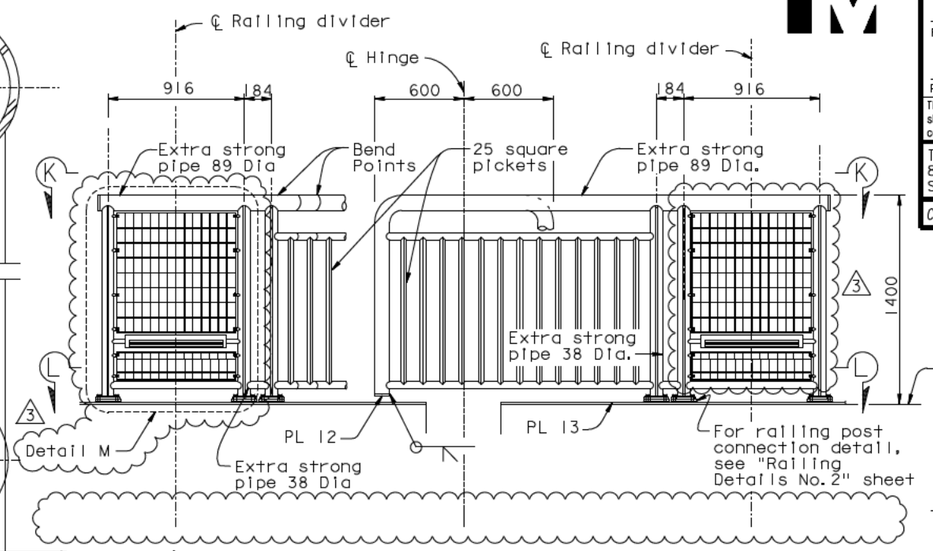

ELEVATION
1:20

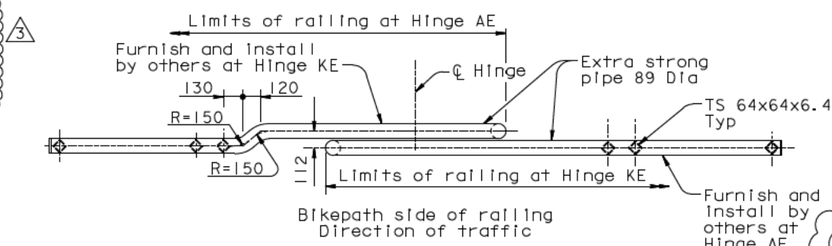

SECTION K-K
1:20

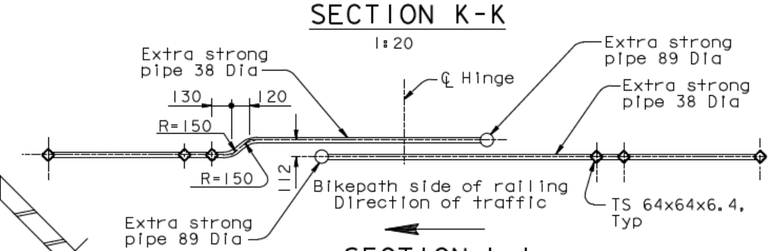

SECTION L-L
1:20

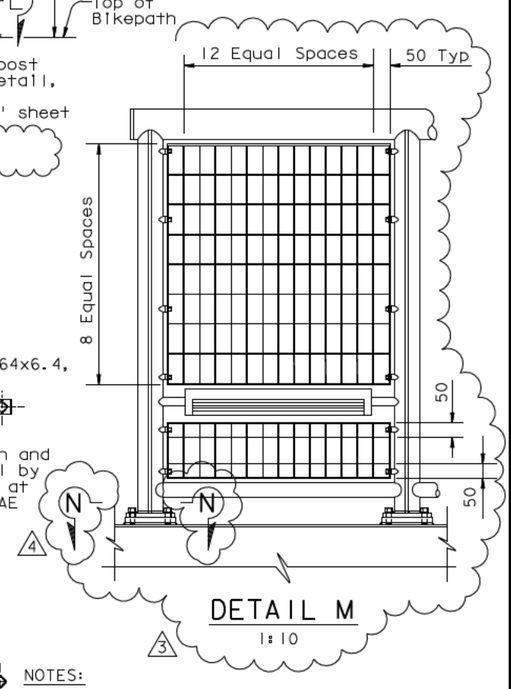

DETAIL M
1:10

RAILING EXPANSION JOINT DETAILS

4 5. For Section N-N, see "Railing Details No. 3A" sheet.

NOTES:

1. For details not shown, see "Railing Details No. 1", "Railing Details No. 2" sheets and "Railing Details No. 3A".
2. For expansion joint details, see "Hinge K Expansion Joint Details" and "Hinge A Expansion Joint Details" sheets.
3. Railing to match adjoining Skyway Structure, Contract 04-012024.
4. Holes on both north and south railing dividers shall be on the east side post.

CONTRACT CHANGE ORDER NO. ____
SHEET ____ OF ____

REQUESTS FOR INFORMATION NOT ADDRESSED IN THIS CCO REMAIN IN FORCE

MARK	DATE	DESCRIPTIONS	BY	CH'D	CCO#
4	08/20/10	BIKEPATH DETAILS	TH	CC	99
3	04/22/09	BIKEPATH DETAILS	TH	MN	99
2	01/30/09	BIKEPATH DETAILS	TH	MN	99
1	11/26/08	BIKEPATH DETAILS	TH	MN	99

REVISIONS

R. Vallzadeh/V. Toan/Y.L./W.L./F.C.
DESIGN OVERSIGHT
SIGN OFF DATE 08/20/10

Rev. Date: 5-18-98

DESIGN	BY T. Ho	CHECKED C. Redfield	
DETAILS	BY R. Xu	CHECKED C. Redfield	
QUANTITIES	BY G. Baker	CHECKED K. Cormier	

PREPARED FOR THE STATE OF CALIFORNIA DEPARTMENT OF TRANSPORTATION

R. Manzanarez
PROJECT ENGINEER

ALL DIMENSIONS ARE IN MILLIMETERS UNLESS OTHERWISE SHOWN

ORIGINAL SCALE IN MILLIMETERS FOR REDUCED PLANS 0 10 20 30 40 50 60 70 80 90 100

CU 04
EA 0120F1

BRIDGE NO. 34-0006L/R
KILOMETER POST 13.2/13.9

SAN FRANCISCO OAKLAND BAY BRIDGE
EAST SPAN SEISMIC SAFETY PROJECT
SELF-ANCHORED SUSPENSION BRIDGE
(SUPERSTRUCTURE & TOWER)

RAILING DETAILS NO. 3

DISREGARD PRINTS BEARING EARLIER REVISION DATES

REVISION DATES (PRELIMINARY STAGE ONLY) 05/18/99 08/06/99 05/31/01 04/08/02 07/01/02 12/19/02

SHEET 483R4 OF

FILE -> I:\bb\04-012001\sas\contract plans and cco\cco\cco#99\13-revision 08-20-10\dgn\akrig06.dgn

USERNAME -> dwinrow DATE PLOTTED -> 20 AUG 2010 TIME PLOTTED -> 11:31:35

100% PS&E