| DIST. | COUNTY | ROUTE | KILOMETER POST TOTAL PROJECT | SHEET NO. | TOTAL SHEETS |
|---|---|---|---|---|---|
| 04 | SF | 80 | 13.2/13.9 | 897R3 | 1204 |

REGISTERED ENGINEER - CIVIL

12-6-04
PLANS APPROVAL DATE

REGISTERED PROFESSIONAL ENGINEER Tien Hung Ho No. C 43990 Exp. 6/30/11 CIVIL STATE OF CALIFORNIA

The State of California or its officers or agents shall not be responsible for the accuracy or completeness of electronic copies of this plan sheet.

T.Y. LIN / MOFFATT & NICHOL
825 BATTERY STREET
SAN FRANCISCO, CA 94111

Caltrans now has a web site! To get to the web site, go to: http://www.dot.ca.gov

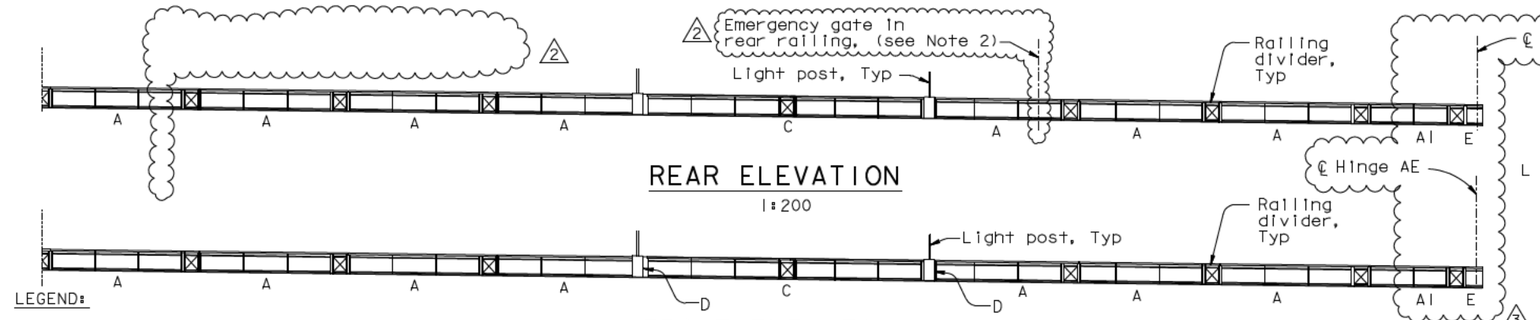


REAR ELEVATION
1:200

FRONT ELEVATION
1:200

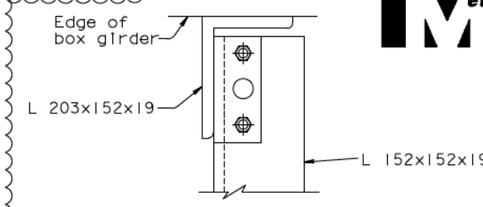


DETAIL F
1:5
(Grating not shown for clarity)
(Detail F shown Detail E similar)

LEGEND:

A Indicates Railing Panel Type Number

(51) Indicates Panel Point

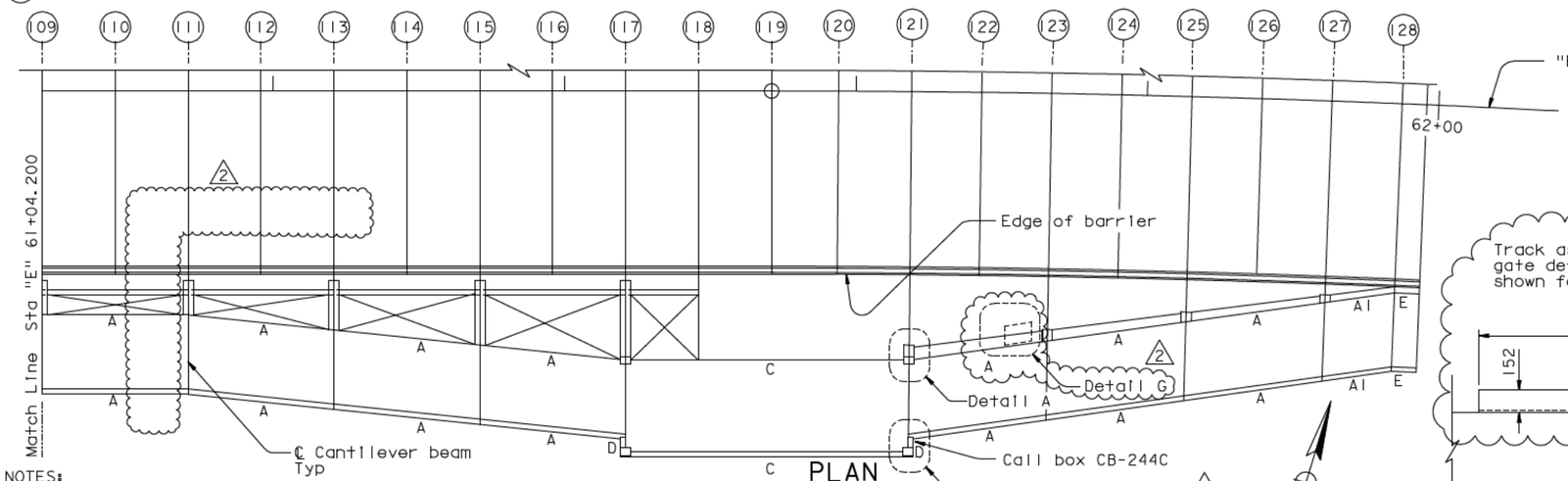


PLAN
1:200

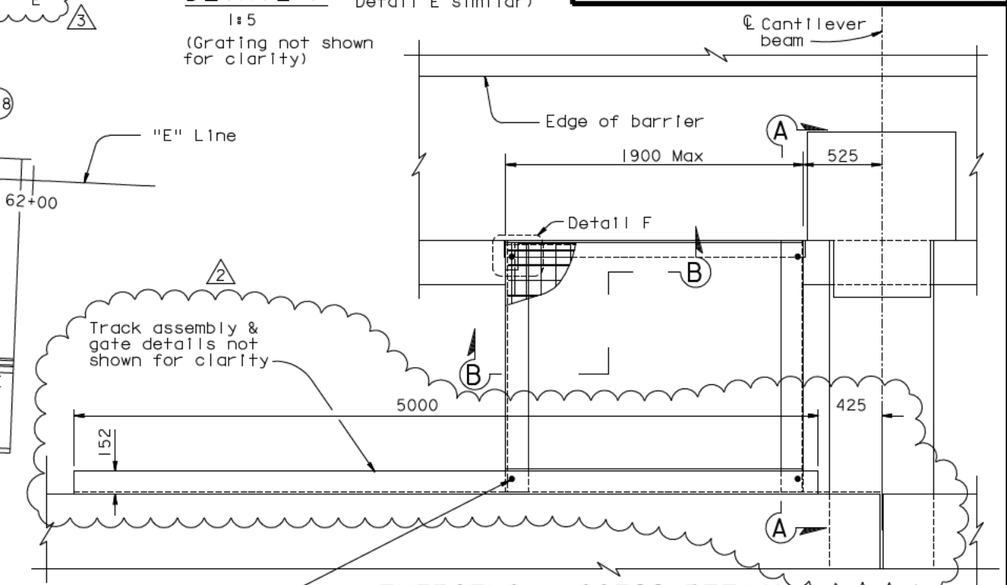


EMERGENCY ACCESS DETAIL
1:20

NOTES:

1. For railing panel Type A through Type E, see "Railing Details No.1" sheet.
2. For emergency gate details and details not shown on Detail D, see "Railing Details No.5" sheet.
3. For "Detail A" and "Detail B", see "Railing Details No.4" sheet.
4. For call box location and details, see "Road Plans".
5. For "Detail G", see "Railing Layout No.3A" sheet.

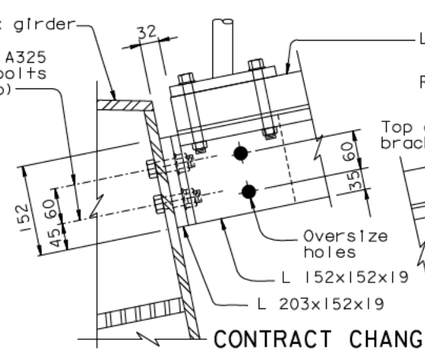


DETAIL C
1:5
(Grating not shown for clarity)

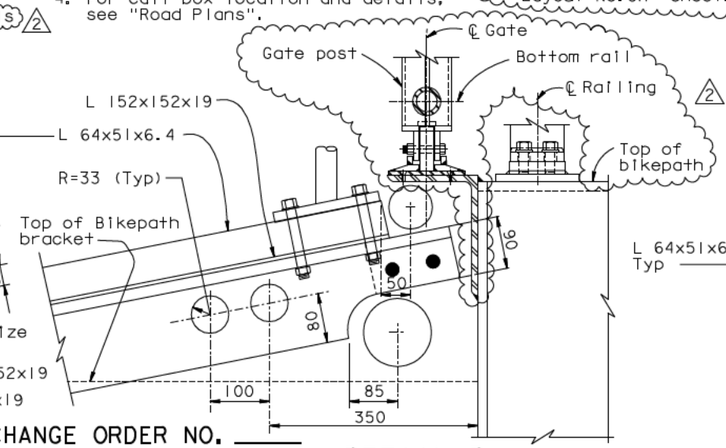


DETAIL D
1:5
(Grating not shown for clarity)
(See Note 2)

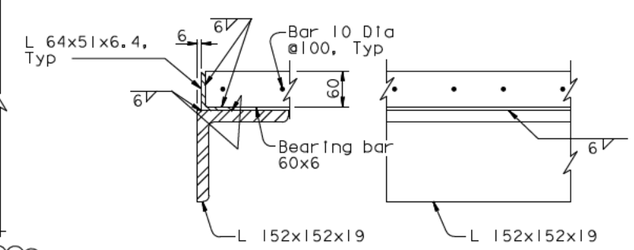


SECTION B-B
1:5

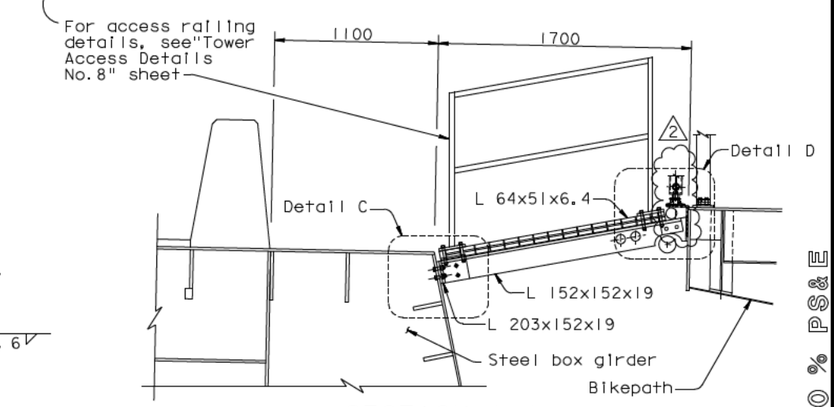


SECTION A-A
1:20

CONTRACT CHANGE ORDER NO. ____
SHEET ____ OF ____

REQUESTS FOR INFORMATION NOT ADDRESSED IN THIS CCO REMAIN IN FORCE

| MARK | DATE | DESCRIPTIONS | BY | CH'D | CCO# |
|---|---|---|---|---|---|
| 3 | 08/20/10 | BIKEPATH DETAILS | TH | MN | 99 |
| 2 | 11/26/08 | BIKEPATH DETAILS | TH | MN | 99 |
| 1 | 09/07/07 | MECHANICAL MODIFICATIONS | JD | TH | 31 |

REVISIONS

ALL DIMENSIONS ARE IN MILLIMETERS UNLESS OTHERWISE SHOWN

R. Vallzadeh/V. Toan/Y.L./W.L./F.C.
DESIGN OVERSIGHT
SIGN OFF DATE 08/20/10

| | BY | CHECKED |
|---|---|---|
| DESIGN | T. Ho | C. Redfield |
| DETAILS | R. Xu | C. Redfield |
| QUANTITIES | G. Baker | K. Cormier |

PREPARED FOR THE STATE OF CALIFORNIA DEPARTMENT OF TRANSPORTATION

R. Manzanarez
PROJECT ENGINEER

BRIDGE NO. 34-0006L/R
KILOMETER POST 13.2/13.9

SAN FRANCISCO OAKLAND BAY BRIDGE
EAST SPAN SEISMIC SAFETY PROJECT
SELF-ANCHORED SUSPENSION BRIDGE
(SUPERSTRUCTURE & TOWER)

# RAILING LAYOUT NO. 3

Rev. Date: 5-18-98

ORIGINAL SCALE IN MILLIMETERS FOR REDUCED PLANS 0 10 20 30 40 50 60 70 80 90 100

CU 04
EA 0120F1

DISREGARD PRINTS BEARING EARLIER REVISION DATES

REVISION DATES (PRELIMINARY STAGE ONLY) 05/15/99 08/02/99 05/31/01 04/08/02 07/01/02 12/19/02

SHEET 480R3 OF

FILE -> I:\bb\04-012001\sas\contract plans and cco\cco\cco#99\13-revision 08-20-10\dgn\akrlg03.dgn

100 % PS&E

DATE PLOTTED -> 20 AUG 2010 TIME PLOTTED -> 14:03:00

USERNAME -> dwinrow