DIST.	COUNTY	ROUTE	KILOMETER POST TOTAL PROJECT	SHEET NO.	TOTAL SHEETS
04	SF	80	13.2/13.9	840S4	1204

Caltrans Metric

REGISTERED ENGINEER - CIVIL

03-04-11
PLANS APPROVAL DATE

REGISTERED PROFESSIONAL ENGINEER Tien Hung Ho No. C 43990 Exp. 06/30/11 CIVIL STATE OF CALIFORNIA

The State of California or its officers or agents shall not be responsible for the accuracy or completeness of electronic copies of this plan sheet.

T.Y. LIN / MOFFATT & NICHOL
825 BATTERY STREET
SAN FRANCISCO, CA 94111

Caltrans now has a web site! To get to the web site, go to: http://www.dot.ca.gov

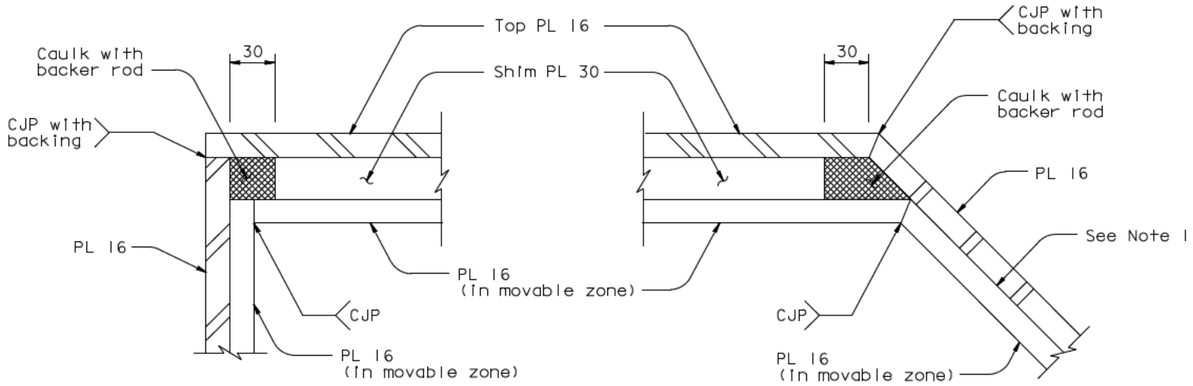

DETAIL P
1:2

DETAIL Q
1:2

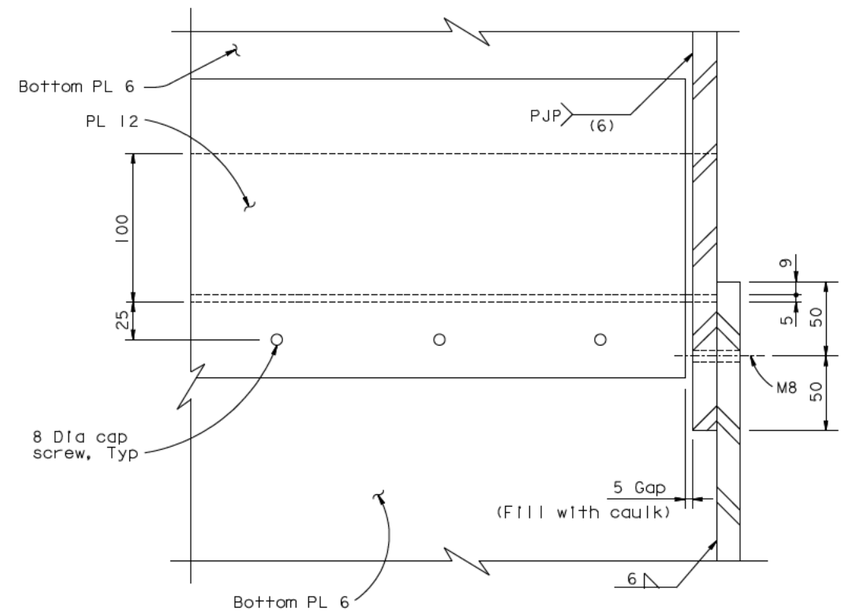

SECTION A-A
1:2

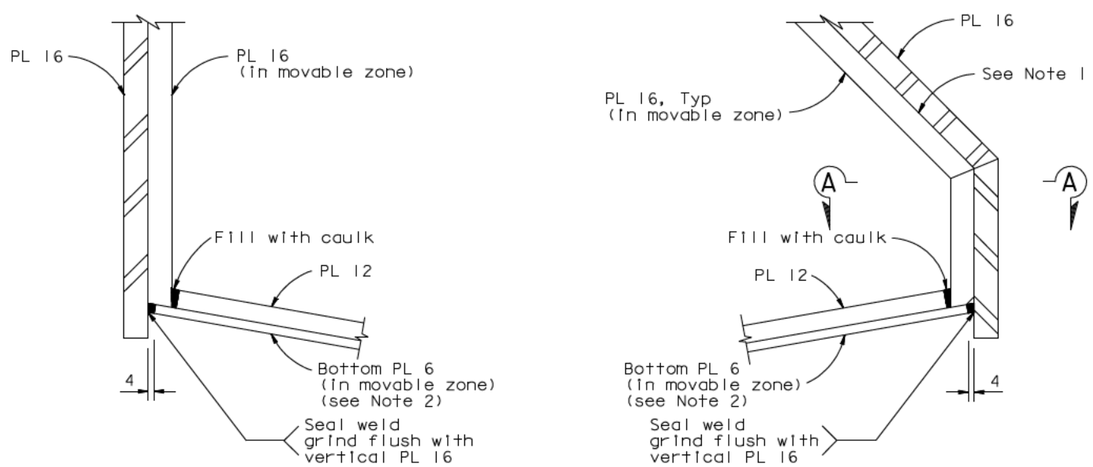

DETAIL R
1:2

DETAIL S
1:2

NOTES:

1. At the Contractor's option, a maximum of 5 mm shim is acceptable between the sloping faces of PL 16's to facilitate fabrication.
2. Bottom PL 6 in the non-movable zone not shown for clarity.

CONTRACT CHANGE ORDER NO. _____
SHEET ____ OF ____

REQUESTS FOR INFORMATION NOT ADDRESSED IN THIS CCO REMAIN IN FORCE

ALL DIMENSIONS ARE IN MILLIMETERS UNLESS OTHERWISE SHOWN

R. Valizadeh/V. Toan/Y.L./W.L./F.C.
DESIGN OVERSIGHT
SIGN OFF DATE 03/04/11

MARK	DATE	DESCRIPTIONS	BY	CH'D	CCO#
0	03/04/11	BIKEPATH DETAILS	CC	TH	99

REVISIONS

DESIGN	BY C. Chol	CHECKED T. Ho	
DETAILS	BY C. Chol	CHECKED T. Ho	
QUANTITIES	BY C. Chol	CHECKED T. Ho	

PREPARED FOR THE STATE OF CALIFORNIA DEPARTMENT OF TRANSPORTATION

R. Manzanarez
PROJECT ENGINEER

BRIDGE NO. 34-0006L/R
KILOMETER POST 13.2/13.9

SAN FRANCISCO OAKLAND BAY BRIDGE
EAST SPAN SEISMIC SAFETY PROJECT
SELF-ANCHORED SUSPENSION BRIDGE
(SUPERSTRUCTURE & TOWER)

BIKEPATH DETAILS NO. 20

Rev. Date: 5-18-98

ORIGINAL SCALE IN MILLIMETERS FOR REDUCED PLANS 0 10 20 30 40 50 60 70 80 90 100

CU 04
EA 0120F1

DISREGARD PRINTS BEARING EARLIER REVISION DATES → 03/04/11

REVISION DATES (PRELIMINARY STAGE ONLY)

SHEET 423S4 OF

FILE -> I:\bb\04-012001\sas\contract plans and cco\cco\cco#99\16-revision 03-04-11\dgn\agbwd16d.dgn

100 % PS&E

USERNAME -> arivera DATE PLOTTED -> 04 MAR 2011 TIME PLOTTED -> 14:19:34