DIST.	COUNTY	ROUTE	KILOMETER POST TOTAL PROJECT	SHEET NO.	TOTAL SHEETS
04	SF	80	13.2/13.9	840S3R1	1204

Caltrans Metric

REGISTERED ENGINEER - CIVIL

08-20-10
PLANS APPROVAL DATE

The State of California or its officers or agents shall not be responsible for the accuracy or completeness of electronic copies of this plan sheet.

REGISTERED PROFESSIONAL ENGINEER Marwan N. Nader No. C 054426 Exp. 12/31/11 CIVIL STATE OF CALIFORNIA

T.Y. LIN / MOFFATT & NICHOL
825 BATTERY STREET
SAN FRANCISCO, CA 94111

Caltrans now has a web site! To get to the web site, go to: http://www.dot.ca.gov

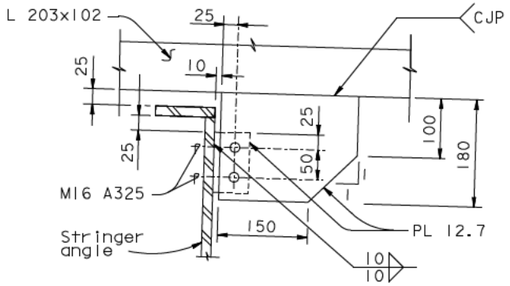

DETAIL A
1:5

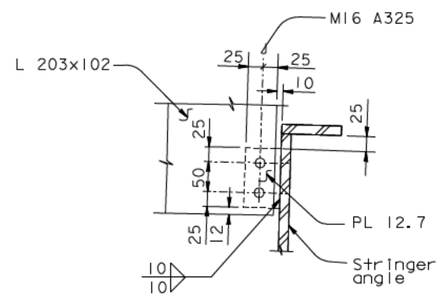

DETAIL B
1:5

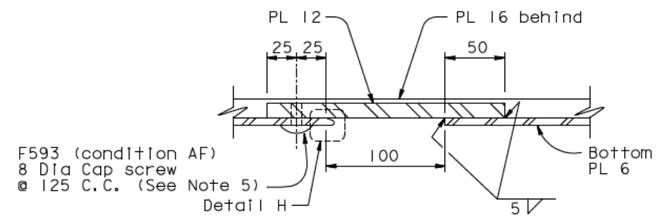

SECTION J-J
1:2.5

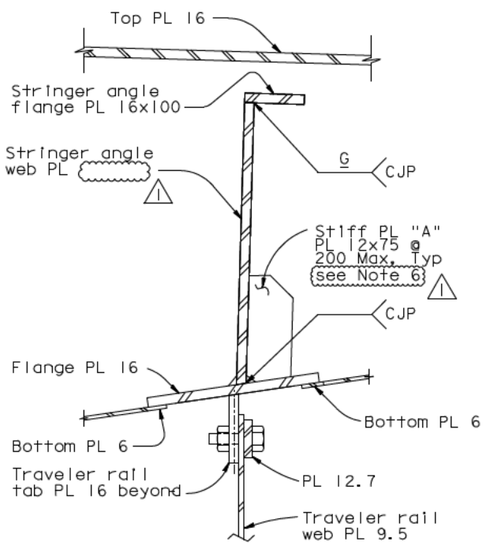

DETAIL C
1:5
(Detail C' similar)

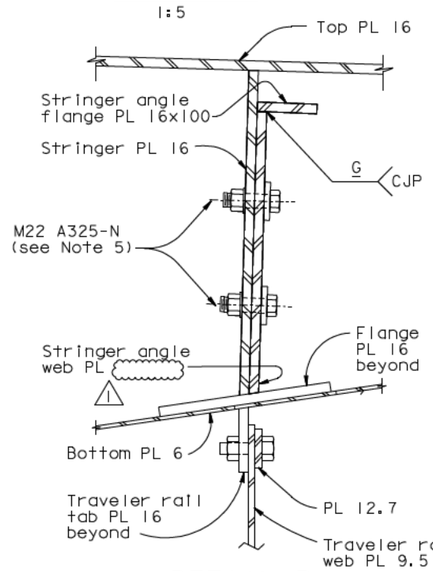

DETAIL D
1:5
(Detail D' similar)

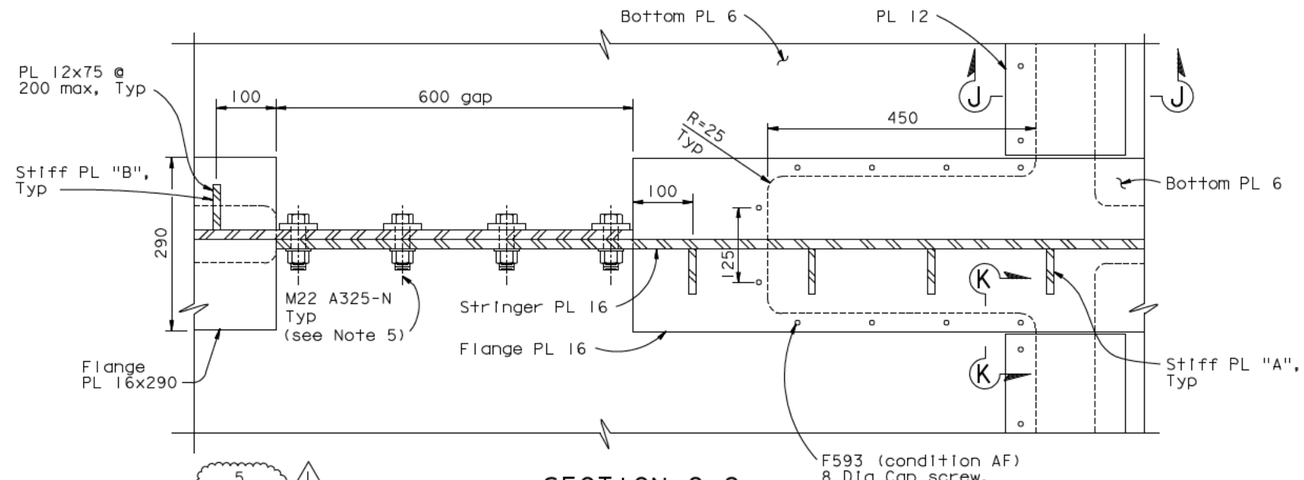

SECTION G-G
1:5
Looking normal to Bottom PL 6

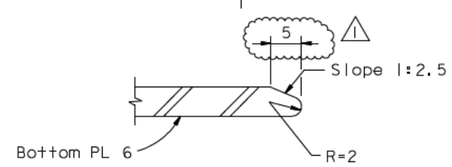

DETAIL H
NTS

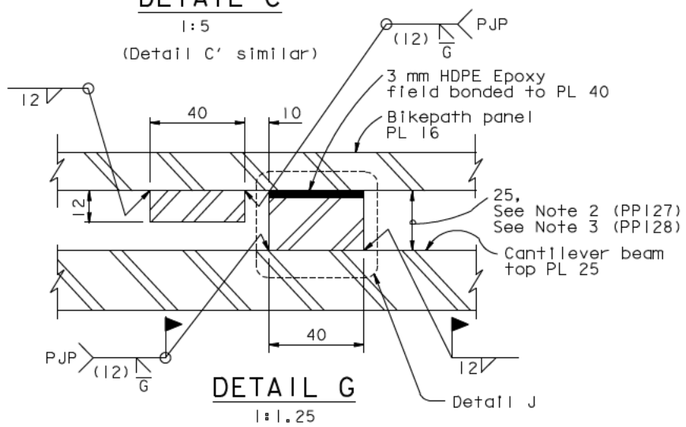

DETAIL G
1:1.25

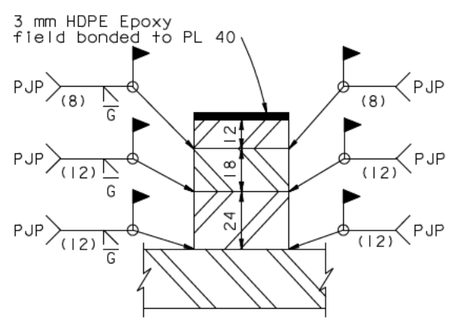

DETAIL J (PP128 Only See Note 3)
1:1.25

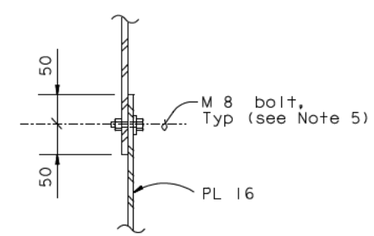

SECTION H-H (SHOWN)
1:5
(Section H'-H' similar and opposite hand)

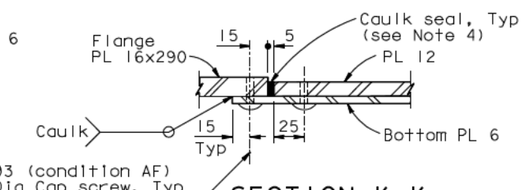

SECTION K-K
1:2.5

NOTES:

1. For information not shown, see "Bikepath Details No.1" through "Bikepath Details No.4", "Bikepath Details No.13" and "E2/E3 Bikepath Traveler Rails" sheets.
2. The height of PL 40 may vary to provide tolerance to adjust for as-built Skyway. Prefabricate PL 40 with heights 20, 25, 25 and 30 mm.
3. The height of PL 40 may vary to provide tolerance to adjust for as-built Skyway. Prefabricate PL 40 with heights 12, 18 and 24 mm for each support. Depending on the required shim height, use one or combination of plates (min height 12, max height 54).
4. Caulk seal along the full width of PL 12, total 4 places.
5. Bolts shall be installed with threads included in the shear plane.
6. For Details not shown, see "Bikepath Details No.3A" sheet. (1)

CONTRACT CHANGE ORDER NO. _____
SHEET ____ OF ____

REQUESTS FOR INFORMATION NOT ADDRESSED IN THIS CCO REMAIN IN FORCE

ALL DIMENSIONS ARE IN MILLIMETERS UNLESS OTHERWISE SHOWN

R. Vallizadeh/V. Toan/Y.L./W.L./F.C.
DESIGN OVERSIGHT
SIGN OFF DATE 03/04/11

MARK	DATE	DESCRIPTIONS	BY	CH'D	CCO#
1	03/04/11	BIKEPATH DETAILS	RB	MN	99
0	08/20/10	BIKEPATH DETAILS	RB	MN	99

REVISIONS

	BY	CHECKED
DESIGN	G. Baker	M. Nader
DETAILS	R. Boundouki	M. Benoit
QUANTITIES	R. Boundouki	A. Baumberger

PREPARED FOR THE STATE OF CALIFORNIA DEPARTMENT OF TRANSPORTATION

R. Manzanarez
PROJECT ENGINEER

BRIDGE NO. 34-0006L/R
KILOMETER POST 13.2/13.9

SAN FRANCISCO OAKLAND BAY BRIDGE
EAST SPAN SEISMIC SAFETY PROJECT
SELF-ANCHORED SUSPENSION BRIDGE
(SUPERSTRUCTURE & TOWER)

BIKEPATH DETAILS NO. 19

Rev. Date: 5-18-98

ORIGINAL SCALE IN MILLIMETERS FOR REDUCED PLANS 0 10 20 30 40 50 60 70 80 90 100

CU 04
EA 0120F1
FILE => $REQUEST

DISREGARD PRINTS BEARING EARLIER REVISION DATES

REVISION DATES (PRELIMINARY STAGE ONLY) 08/20/10

SHEET 43 OF 253R1

USERNAME => $USER DATE PLOTTED => $DATE TIME PLOTTED => $TIME

100 % PS&E