DIST.	COUNTY	ROUTE	KILOMETER POST TOTAL PROJECT	SHEET NO.	TOTAL SHEETS
04	SF	80	13.2/13.9	839R2	1204

REGISTERED ENGINEER - CIVIL

12-6-04
PLANS APPROVAL DATE

REGISTERED PROFESSIONAL ENGINEER Tien Hung Ho No. C 43990 Exp. 6/30/11 CIVIL STATE OF CALIFORNIA

The State of California or its officers or agents shall not be responsible for the accuracy or completeness of electronic copies of this plan sheet.

T.Y. LIN / MOFFATT & NICHOL
825 BATTERY STREET
SAN FRANCISCO, CA 94111

Caltrans now has a web site! To get to the web site, go to: http://www.dot.ca.gov

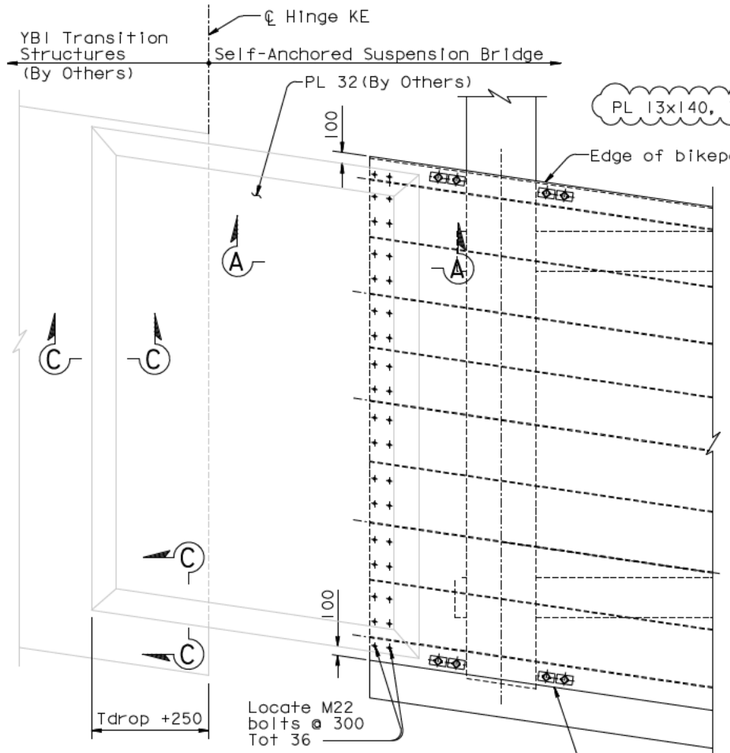

PLAN AT HINGE KE
1:30

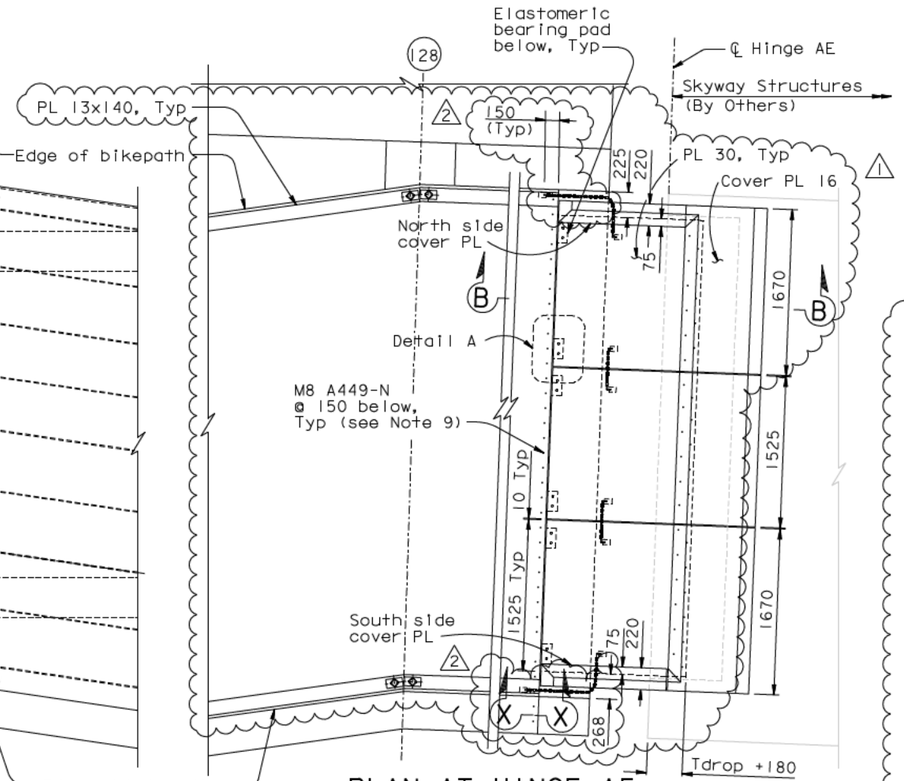

PLAN AT HINGE AE
1:30
1 (Internal stiffening and cover PL not shown for clarity)

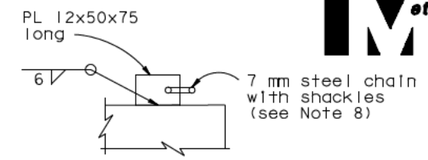

SECTION X-X
1:5

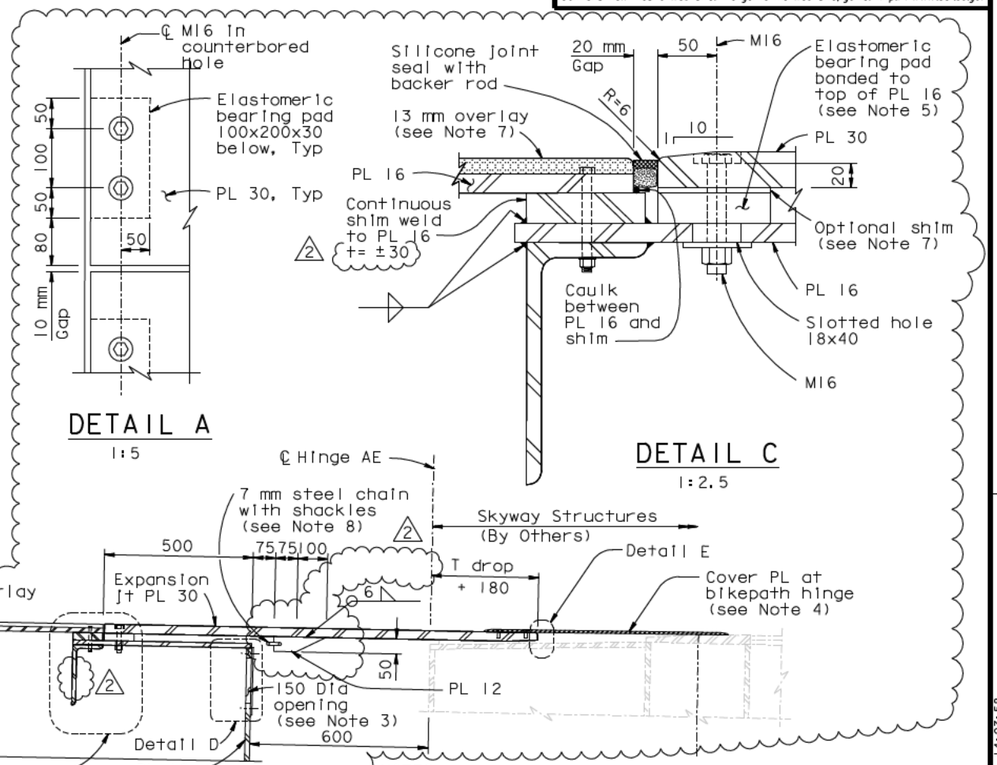

DETAIL A
1:5

DETAIL C
1:2.5

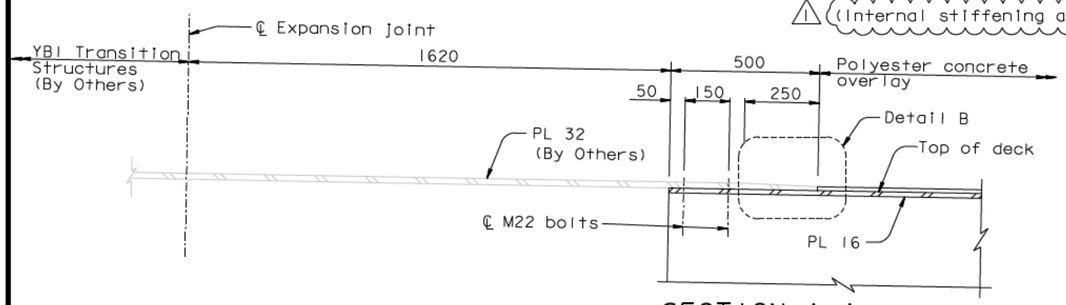

SECTION A-A
1:10

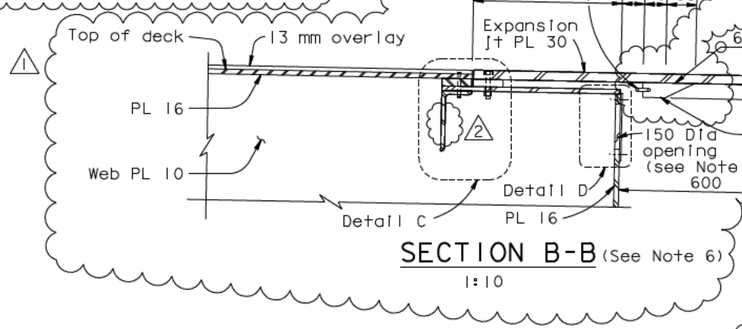

SECTION B-B (See Note 6)
1:10

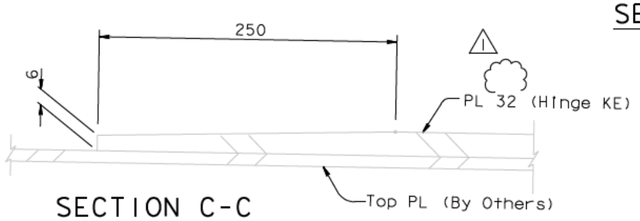

SECTION C-C
1:2.5

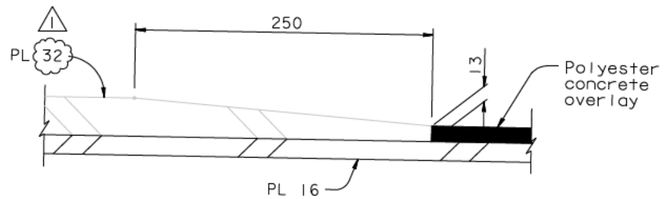

DETAIL B
1:2.5

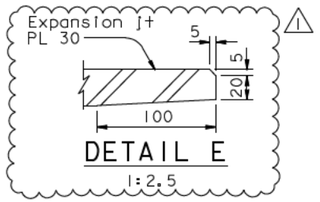

DETAIL E
1:2.5

NOTES:

1. Top surface of exposed plates shall have non-skid coating.
2. For Tdrop dimension, see "Hinge K Expansion Joint Details" and "Hinge A Expansion Joint Details" sheets.
3. For Detail D, see "Bikepath Details No.5" sheet.
4. For cover plate at bikepath hinge details, see "Bikepath Details No.15A" sheet.
5. Pre-compress elastomeric pad by 2 mm by means of 1 turn of M16 bolt.
6. For details not shown, see "Bikepath Details No.17, 18 & 19" sheets.
7. Thickness of shim and overlay may vary to provide tolerance to adjust for As-Built Skyway.
8. Chains and shackles should be hot-dipped galvanized and have a working capacity of 12kN. Chain drape shall not exceed 50 mm.
9. Bolts shall be installed with threads included in the shear plane.

CONTRACT CHANGE ORDER NO. _____
SHEET ____ OF ____

REQUESTS FOR INFORMATION NOT ADDRESSED IN THIS CCO REMAIN IN FORCE

ALL DIMENSIONS ARE IN MILLIMETERS UNLESS OTHERWISE SHOWN

R. Vallzadeh/V. Toan/Y.L./W.L./F.C.
DESIGN OVERSIGHT
SIGN OFF DATE 03/04/11

MARK	DATE	DESCRIPTIONS	BY	CH'D	CCO#
2	03/04/11	BIKEPATH DETAILS	CC	TH	99
1	08/20/10	BIKEPATH DETAILS	CC	TH	99

REVISIONS

DESIGN	BY T. Ho	CHECKED T. McMeans	
DETAILS	BY R. Xu	CHECKED P. Ritchie	
QUANTITIES	BY C. Bernardo	CHECKED S. Shi	

PREPARED FOR THE STATE OF CALIFORNIA DEPARTMENT OF TRANSPORTATION

R. Manzanarez
PROJECT ENGINEER

BRIDGE NO. 34-0006L/R
KILOMETER POST 13.2/13.9

SAN FRANCISCO OAKLAND BAY BRIDGE
EAST SPAN SEISMIC SAFETY PROJECT
SELF-ANCHORED SUSPENSION BRIDGE
(SUPERSTRUCTURE & TOWER)

BIKEPATH DETAILS NO. 15

Rev. Date: 5-18-98

ORIGINAL SCALE IN MILLIMETERS FOR REDUCED PLANS 0 10 20 30 40 50 60 70 80 90 100

CU 04
EA 0120F1

DISREGARD PRINTS BEARING EARLIER REVISION DATES

REVISION DATES (PRELIMINARY STAGE ONLY) 05/31/01 04/08/02 07/01/02 12/19/02

SHEET 422R2 OF

FILE -> I:\bb\04-012001\sas\contract plans and cco\cco\cco#99\16-revision 03-04-11\dgn\agbwd15.dgn

USERNAME -> DMinrow DATE PLOTTED -> 04 MAR 2011 TIME PLOTTED -> 14:03:58

100 % PS&E