DIST.	COUNTY	ROUTE	KILOMETER POST TOTAL PROJECT	SHEET NO.	TOTAL SHEETS
04	SF	80	13.2/13.9	837R4	1204

REGISTERED ENGINEER - CIVIL

12-6-04
PLANS APPROVAL DATE

REGISTERED PROFESSIONAL ENGINEER Tien Hung Ho No. C 43990 Exp. 06/30/11 CIVIL STATE OF CALIFORNIA

The State of California or its officers or agents shall not be responsible for the accuracy or completeness of electronic copies of this plan sheet.

T.Y. LIN / MOFFATT & NICHOL
825 BATTERY STREET
SAN FRANCISCO, CA 94111

Caltrans now has a web site! To get to the web site, go to: http://www.dot.ca.gov

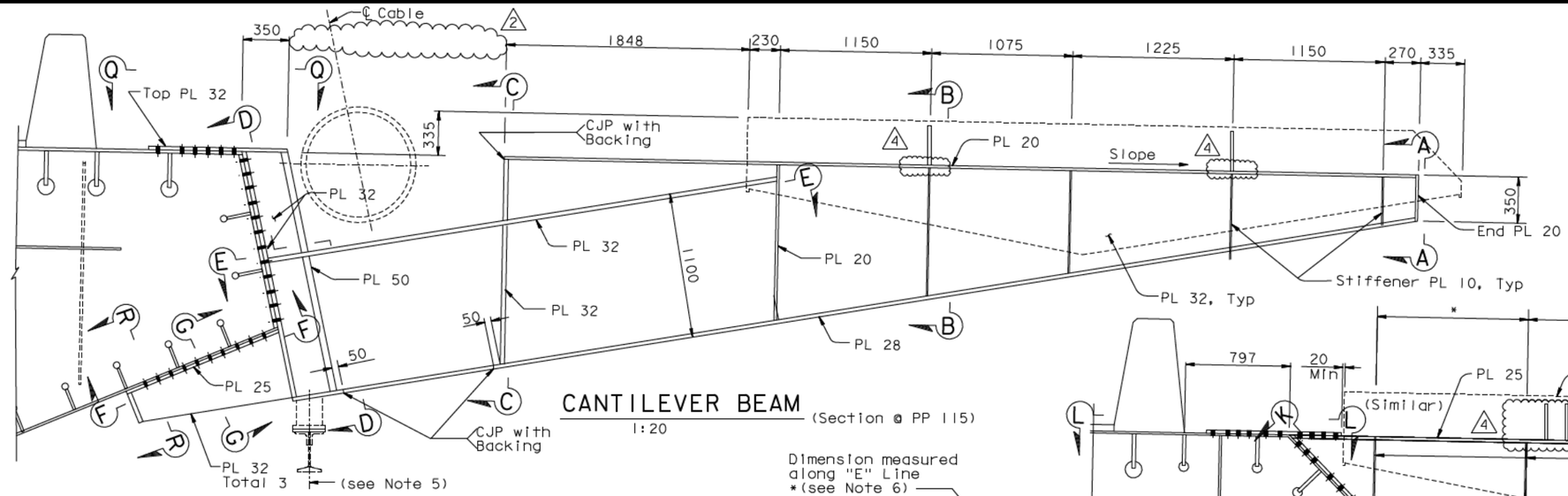

CANTILEVER BEAM (Section @ PP 115)
1:20

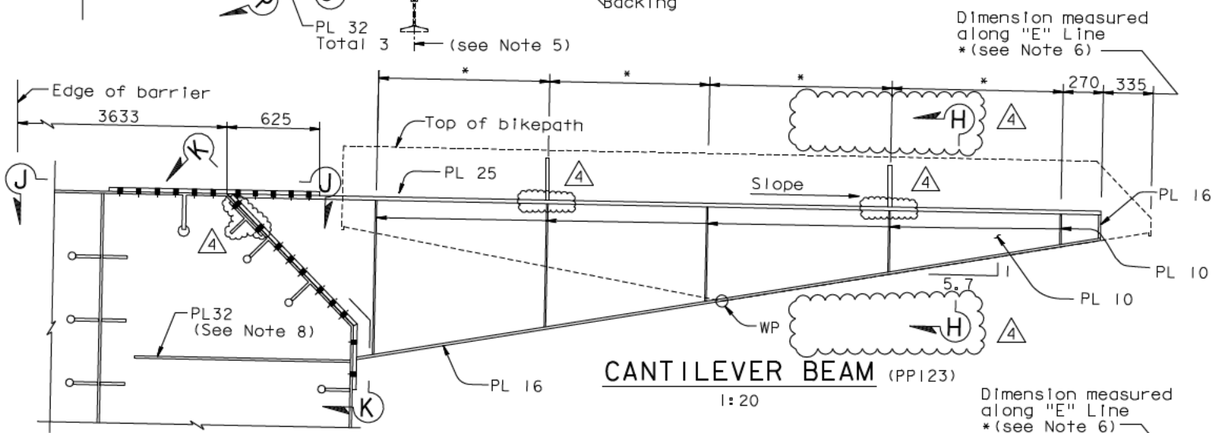

CANTILEVER BEAM (PP123)
1:20

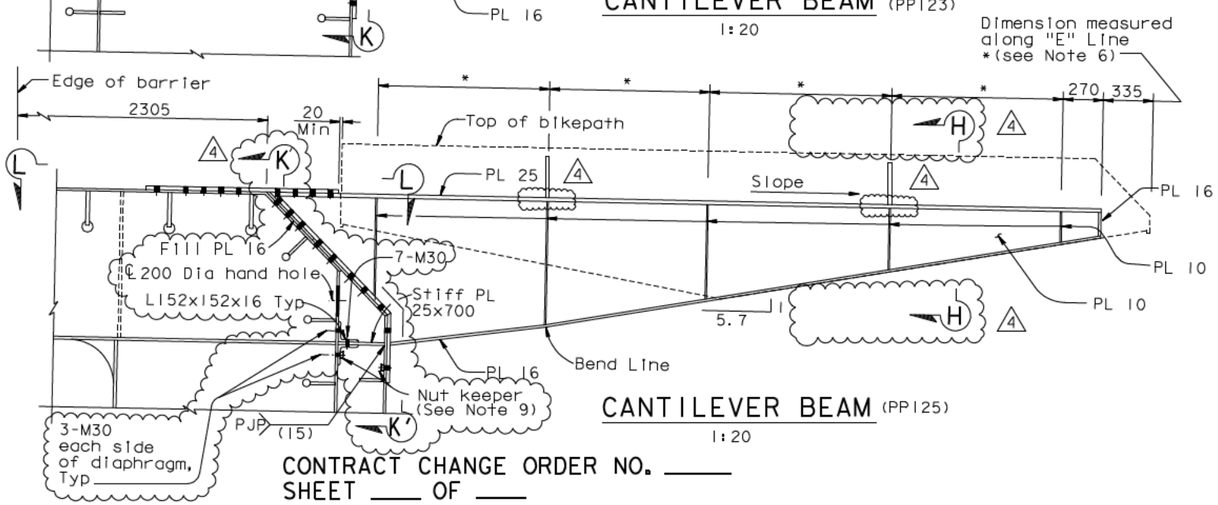

CANTILEVER BEAM (PP125)
1:20

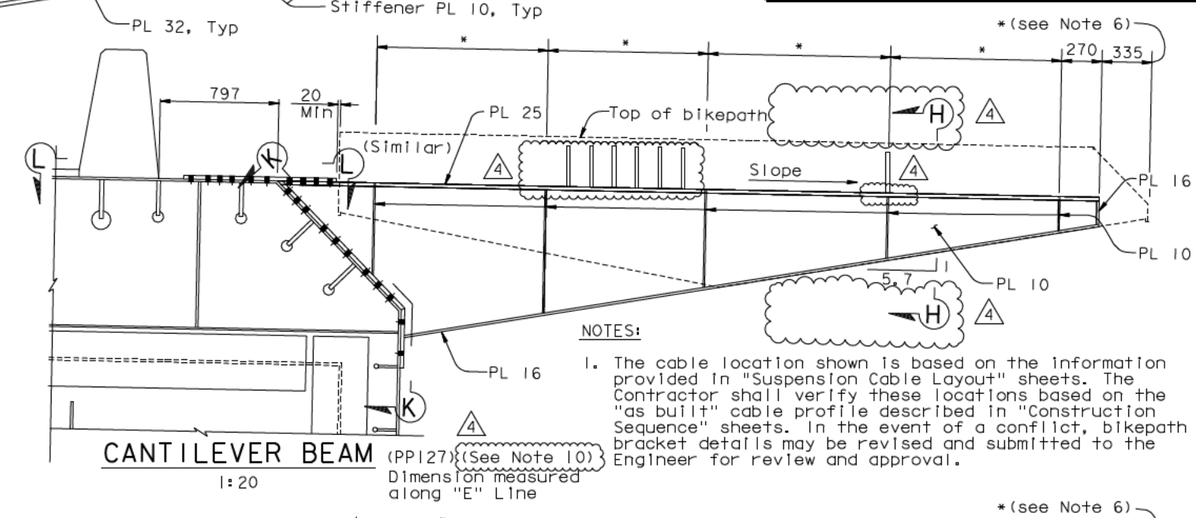

CANTILEVER BEAM (PP127) (See Note 10)
1:20
Dimension measured along "E" Line

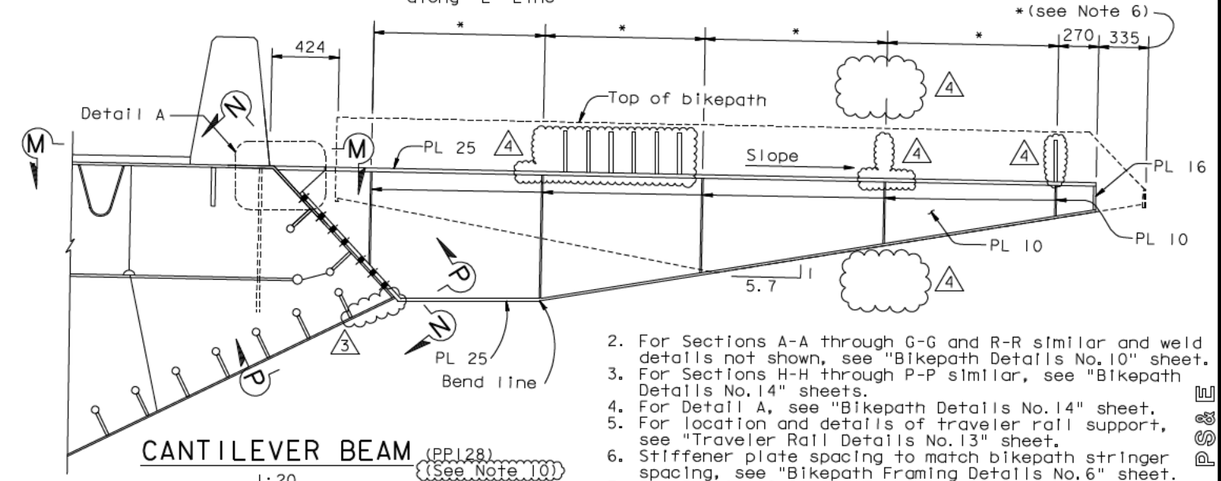

CANTILEVER BEAM (PP128) (See Note 10)
1:20
Dimension measured along "E" Line

NOTES:

1. The cable location shown is based on the information provided in "Suspension Cable Layout" sheets. The Contractor shall verify these locations based on the "as built" cable profile described in "Construction Sequence" sheets. In the event of a conflict, bikepath bracket details may be revised and submitted to the Engineer for review and approval.
2. For Sections A-A through G-G and R-R similar and weld details not shown, see "Bikepath Details No.10" sheet.
3. For Sections H-H through P-P similar, see "Bikepath Details No.14" sheets.
4. For Detail A, see "Bikepath Details No.14" sheet.
5. For location and details of traveler rail support, see "Traveler Rail Details No.13" sheet.
6. Stiffener plate spacing to match bikepath stringer spacing, see "Bikepath Framing Details No.6" sheet.
7. For Section Q-Q, see Section F-F of "Bikepath Details No.11" sheet.
8. For bikepath bracket stiffener, see Note 6 on "Floorbeam At East Transition No.5" sheet.
9. For nut keeper details, see "West Jacking Frame Details No.1" sheet.
10. For Information not shown, See "Bikepath Details No.17, 18 & 19" sheets.

CONTRACT CHANGE ORDER NO. ____
SHEET ___ OF ___

REQUESTS FOR INFORMATION NOT ADDRESSED IN THIS CCO REMAIN IN FORCE

MARK	DATE	DESCRIPTIONS	BY	CH'D	CCO#
4	08/20/10	BIKEPATH DETAILS	CC	TH	99
3	10/23/09	BIKEPATH DETAILS	TH	MN	99
2	11/26/08	BIKEPATH DETAILS	TH	MN	99
1	07/20/07	BIKEPATH BRACKETS	GB	TH	33

REVISIONS

R. Vallzadeh/V. Toan/Y.L./W.L./F.C.
DESIGN OVERSIGHT
SIGN OFF DATE 08/20/10

Rev. Date: 5-18-98

DESIGN	BY T. Ho	CHECKED T. McMeans	
DETAILS	BY R. Xu	CHECKED P. Ritchie	
QUANTITIES	BY C. Bernardo	CHECKED S. Shi	

PREPARED FOR THE STATE OF CALIFORNIA DEPARTMENT OF TRANSPORTATION

R. Manzanarez
PROJECT ENGINEER

ALL DIMENSIONS ARE IN MILLIMETERS UNLESS OTHERWISE SHOWN

BRIDGE NO. 34-0006L/R
KILOMETER POST 13.2/13.9

SAN FRANCISCO OAKLAND BAY BRIDGE
EAST SPAN SEISMIC SAFETY PROJECT
SELF-ANCHORED SUSPENSION BRIDGE
(SUPERSTRUCTURE & TOWER)

BIKEPATH DETAILS NO. 13

ORIGINAL SCALE IN MILLIMETERS FOR REDUCED PLANS 0 10 20 30 40 50 60 70 80 90 100

CU 04
EA 0120F1

DISREGARD PRINTS BEARING EARLIER REVISION DATES

REVISION DATES (PRELIMINARY STAGE ONLY) 05/17/01 04/08/02 07/01/02 12/18/02 11/13/05

SHEET 420R4 OF

FILE -> I:\bb\04-012001\sas\contract plans and cco\cco\cco#99\13-revision 08-20-10\dgn\agbwd13.dgn

USERNAME -> dwinrow DATE PLOTTED -> 20 AUG 2010 TIME PLOTTED -> 11:46:34

100% PS&E