DIST.	COUNTY	ROUTE	KILOMETER POST TOTAL PROJECT	SHEET NO.	TOTAL SHEETS
04	SF	80	13.2/13.9	833R3	1204

REGISTERED ENGINEER - CIVIL

12-6-04
PLANS APPROVAL DATE

REGISTERED PROFESSIONAL ENGINEER Tien Hung Ho No. C 43990 Exp. 6/30/11 CIVIL STATE OF CALIFORNIA

The State of California or its officers or agents shall not be responsible for the accuracy or completeness of electronic copies of this plan sheet.

T.Y. LIN / MOFFATT & NICHOL
825 BATTERY STREET
SAN FRANCISCO, CA 94111

Caltrans now has a web site! To get to the web site, go to: http://www.dot.ca.gov

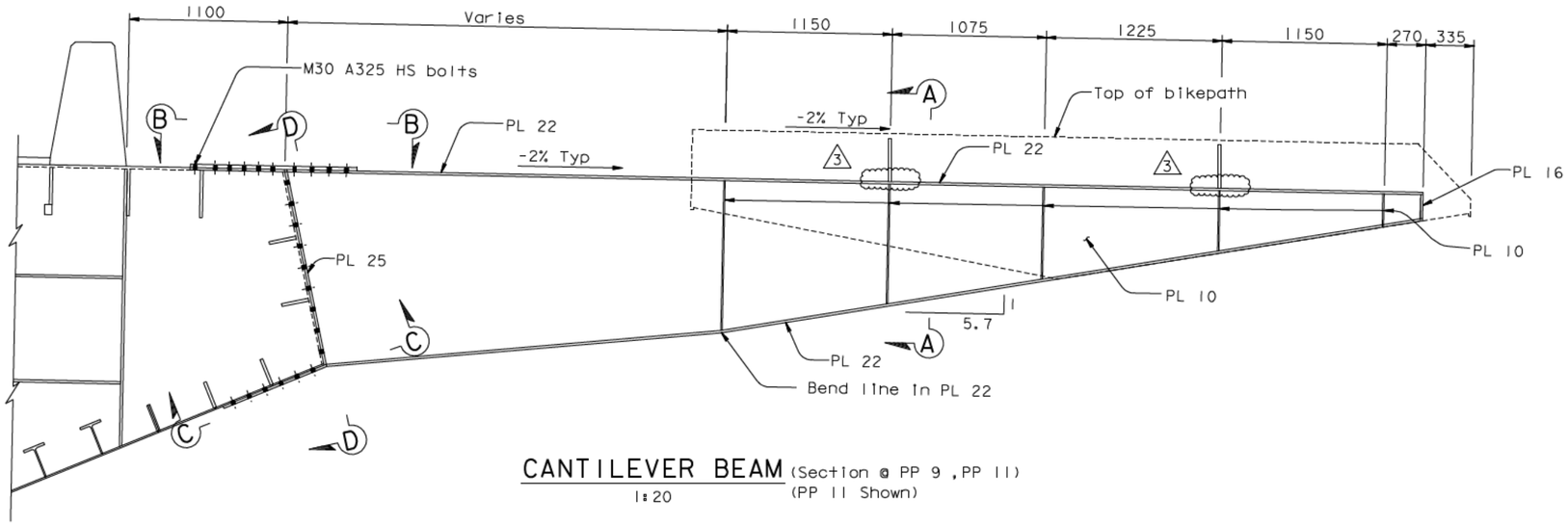

CANTILEVER BEAM (Section @ PP 9 ,PP 11)
1:20 (PP 11 Shown)

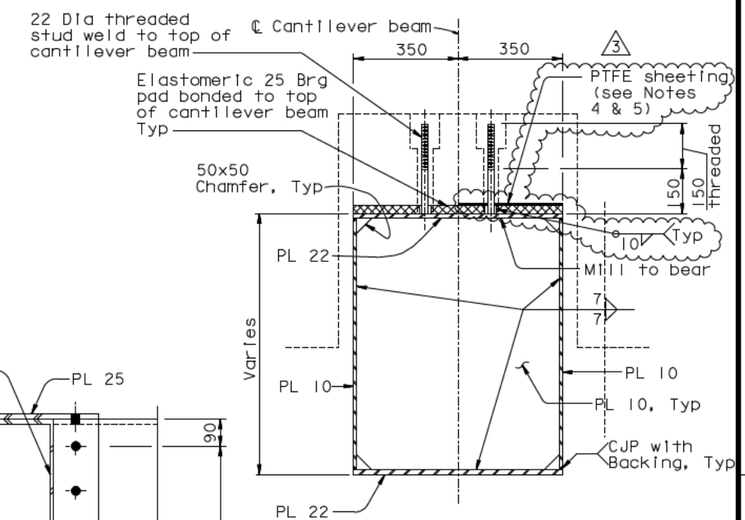

SECTION A-A
1:10

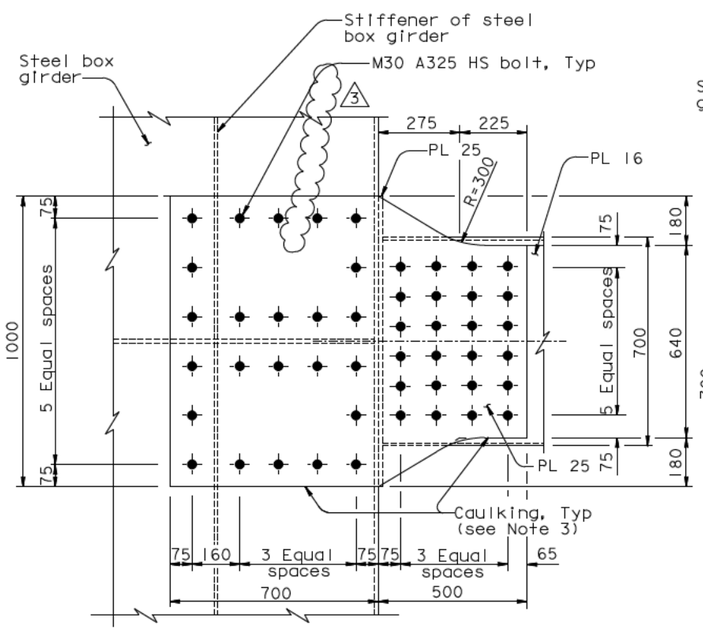

SECTION B-B
1:10

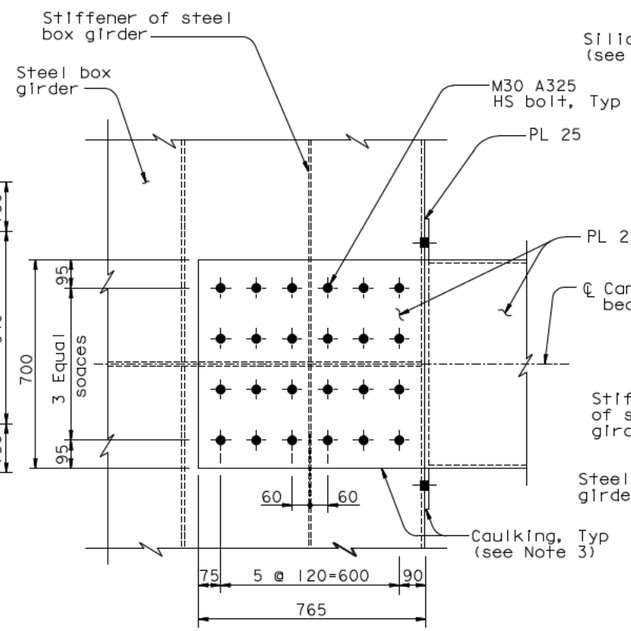

SECTION C-C
1:10

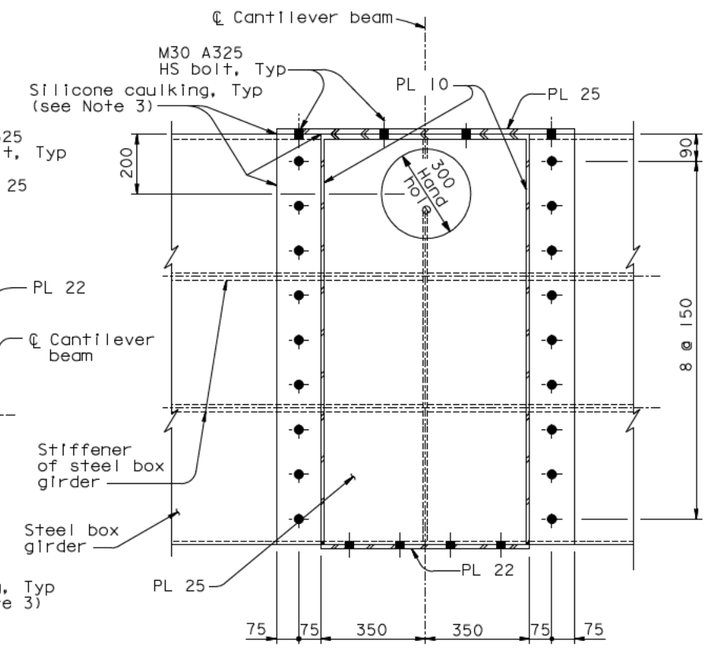

SECTION D-D
1:10

NOTES:

1. Bikepath deck similar to typical bikepath deck. For details, see "Bikepath Details No.3" sheet.
2. For details not shown, see "Bikepath Details No.1" sheet.
3. Caulking shall be provided along edges of bolted connection between bikepath cantilever beam and box girder.
4. For PTFE sheeting see similar Section A-A on "Bikepath Details No.4" sheet.
5. For limits of PTFE see also "Elastomeric Bearing Pad" on "Bikepath Details No.4" sheet.

CONTRACT CHANGE ORDER NO. ____
SHEET ___ OF ___

REQUESTS FOR INFORMATION NOT ADDRESSED IN THIS CCO REMAIN IN FORCE

MARK	DATE	DESCRIPTIONS	BY	CH'D	CCO#
3	08/20/10	BIKEPATH DETAILS	TH	CC	99
2	07/07/08	CAULKING	AS	TH	66
1	07/20/07	BIKEPATH BRACKETS	GB	TH	33

REVISIONS

R. Vallzadeh/V. Toan/Y.L./W.L./F.C.
DESIGN OVERSIGHT
SIGN OFF DATE 08/20/10

	BY	CHECKED
DESIGN	T. Ho	T. McMeans
DETAILS	R. Xu	P. Ritchie
QUANTITIES	C. Bernardo	S. Shi

PREPARED FOR THE STATE OF CALIFORNIA DEPARTMENT OF TRANSPORTATION

ALL DIMENSIONS ARE IN MILLIMETERS UNLESS OTHERWISE SHOWN

R. Manzanarez
PROJECT ENGINEER

BRIDGE NO. 34-0006L/R
KILOMETER POST 13.2/13.9

SAN FRANCISCO OAKLAND BAY BRIDGE
EAST SPAN SEISMIC SAFETY PROJECT
SELF-ANCHORED SUSPENSION BRIDGE
(SUPERSTRUCTURE & TOWER)

BIKEPATH DETAILS NO. 9

Rev. Date: 5-18-98

ORIGINAL SCALE IN MILLIMETERS FOR REDUCED PLANS 0 10 20 30 40 50 60 70 80 90 100

CU 04
EA 0120F1

DISREGARD PRINTS BEARING EARLIER REVISION DATES

REVISION DATES (PRELIMINARY STAGE ONLY) 05/27/01 04/08/02 07/01/02 12/18/02 11/13/05

SHEET 416R3 OF

FILE -> I:\bb\04-012001\sas\contract plans and cco\cco\cco#99\14-revision 08-20-10\dgn\agbwd09.dgn

USERNAME -> arivera DATE PLOTTED -> 26 AUG 2010 TIME PLOTTED -> 17:33:29

100 % PS&E