DIST.	COUNTY	ROUTE	KILOMETER POST TOTAL PROJECT	SHEET NO.	TOTAL SHEETS
04	SF	80	13.2/13.9	828R2	1204

REGISTERED ENGINEER - CIVIL

12-6-04
PLANS APPROVAL DATE

REGISTERED PROFESSIONAL ENGINEER Tien Hung Ho No. C 43990 Exp. 6/30/11 CIVIL STATE OF CALIFORNIA

The State of California or its officers or agents shall not be responsible for the accuracy or completeness of electronic copies of this plan sheet.

T.Y. LIN / MOFFATT & NICHOL
825 BATTERY STREET
SAN FRANCISCO, CA 94111

Caltrans now has a web site! To get to the web site, go to: http://www.dot.ca.gov

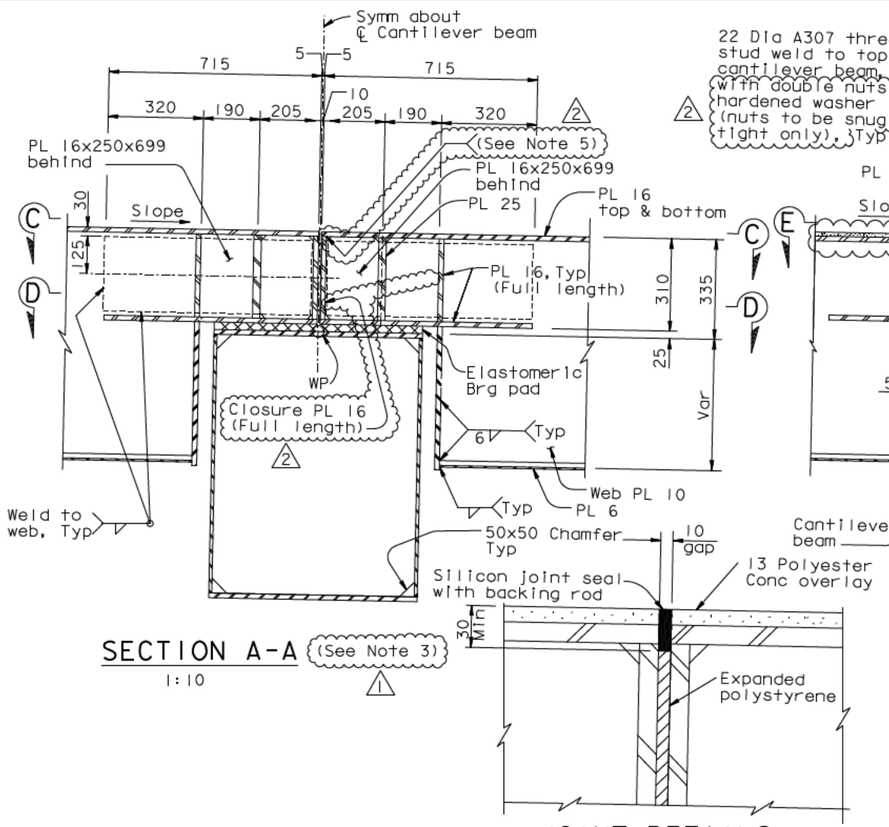

SECTION A-A (See Note 3)
1:10

JOINT DETAILS
1:2.5

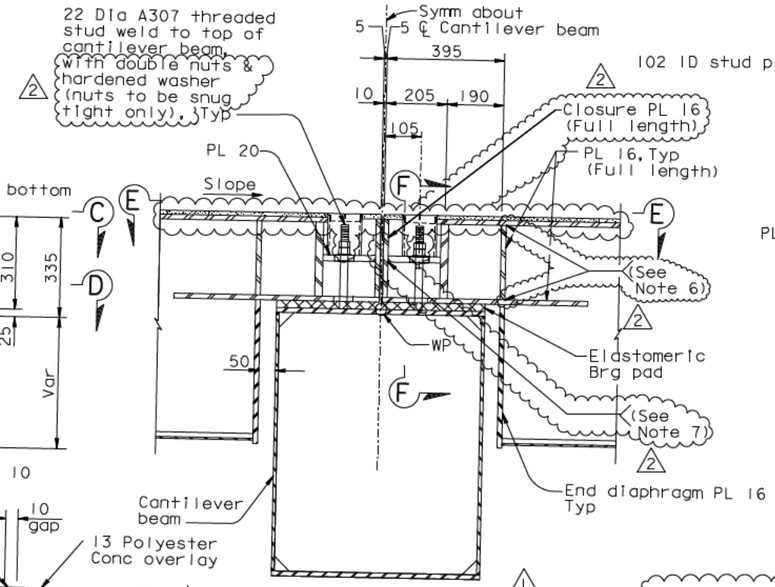

SECTION B-B (See Note 3)
1:10

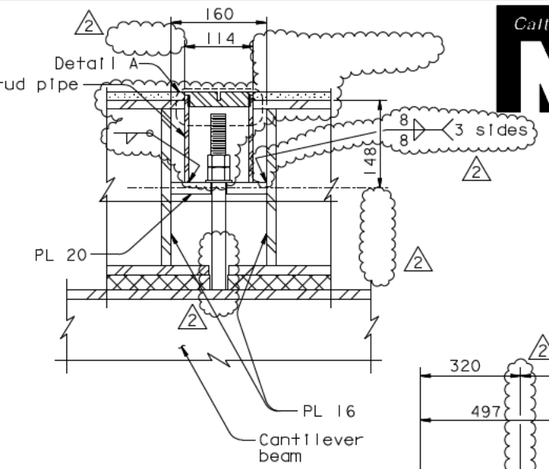

SECTION F-F
1:5

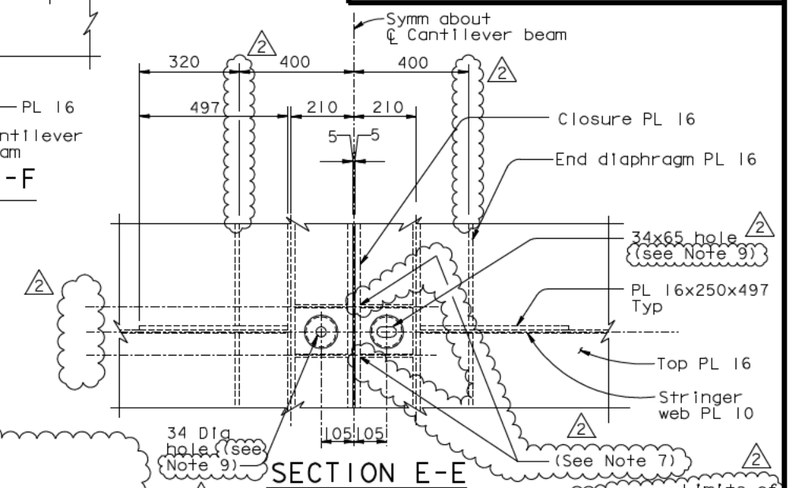

SECTION E-E
1:10

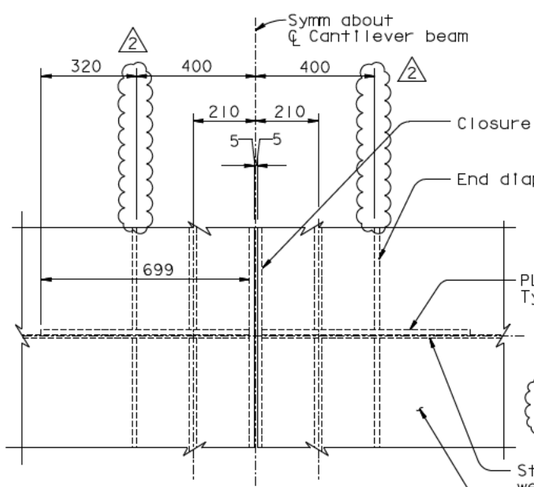

SECTION C-C
1:10

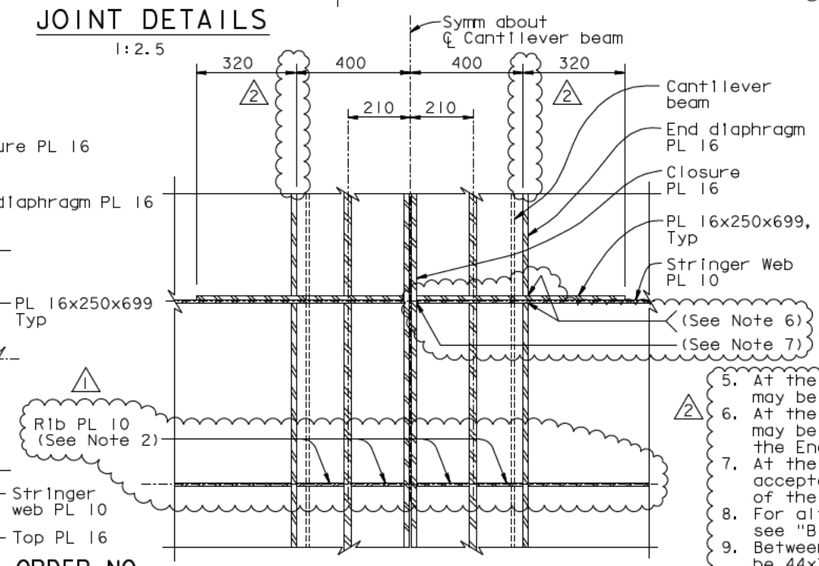

SECTION D-D
1:10

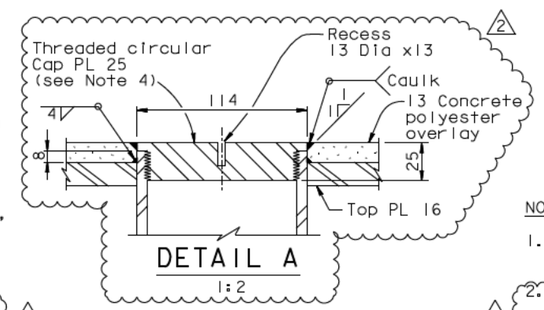

DETAIL A
1:2

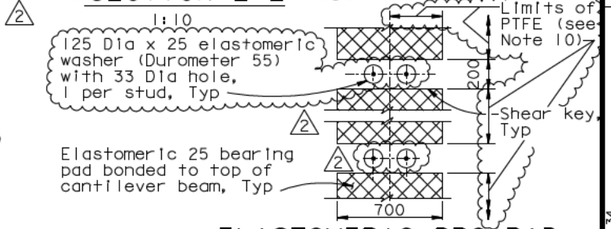

ELASTOMERIC BRG PAD
1:20

NOTES:

1. For location of Sections A-A and B-B, see "Bikepath Framing Details No.1" through "Bikepath Framing Details No.6" sheets.
2. At the Contractor's option, R1b PL 10 may be omitted in area bounded by End Diaphragm PL 16 and Closure PL 16, subject to review and approval of the Engineer.
3. At the Contractor's option, CJP with backing, (or 8mm double sided fillets may be used in lieu of CJP, subject to review and approval of the Engineer.
4. The threaded cap shall be supplied with two recesses spaced apart such that the cap can be installed with the aid of a spanner wrench. The recesses shall not penetrate the plate. The Contractor may propose alternate details for opening and closing the threaded cap, subject to review and approval of the Engineer. Threads shall follow ANSI standards. The Contractor may propose an alternate threading detail, subject to review and approval of the Engineer.
5. At the Contractor's option, 10mm effective PJP may be used all around edges of the Closure PL 16.
6. At the Contractor's option, 10mm effective PJP may be used subject to review and approval of the Engineer.
7. At the Contractor's option, tight-fit is acceptable, subject to review and approval of the Engineer.
8. For alternate elastomeric bearing pad details, see "Bikepath Details No.4A" sheet.
9. Between PP 117 and PP 121 slot hole size shall be 44x75 and round hole size shall be 44 for for the 30 Dia threaded stud.
10. For PTFE details, see Section A-A on "Bikepath Details No.1" sheet.

ALL DIMENSIONS ARE IN MILLIMETERS UNLESS OTHERWISE SHOWN

CONTRACT CHANGE ORDER NO. ____
SHEET ____ OF ____

REQUESTS FOR INFORMATION NOT ADDRESSED IN THIS CCO REMAIN IN FORCE

R. Vallzadeh/V. Toan/Y.L./W.L./F.C.
DESIGN OVERSIGHT
SIGN OFF DATE 08/20/10

MARK	DATE	DESCRIPTIONS	BY	CH'D	CCO#
2	08/20/10	BIKEPATH DETAILS	CC	TH	99
1	07/24/09	BIKEPATH DETAILS	CC	TH	99

REVISIONS

DESIGN	BY T. Ho	CHECKED T. McMeans	
DETAILS	BY R. Xu	CHECKED P. Ritchie	
QUANTITIES	BY C. Bernardo	CHECKED S. Shi	

PREPARED FOR THE STATE OF CALIFORNIA DEPARTMENT OF TRANSPORTATION

R. Manzanarez
PROJECT ENGINEER

BRIDGE NO. 34-0006L/R
KILOMETER POST 13.2/13.9

SAN FRANCISCO OAKLAND BAY BRIDGE
EAST SPAN SEISMIC SAFETY PROJECT
SELF-ANCHORED SUSPENSION BRIDGE
(SUPERSTRUCTURE & TOWER)

BIKEPATH DETAILS NO. 4

Rev. Date: 5-18-98

ORIGINAL SCALE IN MILLIMETERS FOR REDUCED PLANS 0 10 20 30 40 50 60 70 80 90 100

CU 04
EA 0120F1

DISREGARD PRINTS BEARING EARLIER REVISION DATES

REVISION DATES (PRELIMINARY STAGE ONLY): 08/08/99 05/31/01 04/08/02 07/01/02 12/18/02 11/13/05

SHEET 411R2 OF

FILE -> I:\bb\04-012001\sas\contract plans and cco\cco\cco#99\14-revision 08-20-10\dgn\agbwd04.dgn

USERNAME -> arivera DATE PLOTTED -> 26 AUG 2010 TIME PLOTTED -> 17:35:34

100% PS&E