DIST.	COUNTY	ROUTE	KILOMETER POST TOTAL PROJECT	SHEET NO.	TOTAL SHEETS
04	SF	80	13.2/13.9	826R2	1204

Caltrans Metric

REGISTERED ENGINEER - CIVIL

12-6-04
PLANS APPROVAL DATE

REGISTERED PROFESSIONAL ENGINEER Tien Hung Ho No. C 43990 Exp. 6/03/11 CIVIL STATE OF CALIFORNIA

The State of California or its officers or agents shall not be responsible for the accuracy or completeness of electronic copies of this plan sheet.

T.Y. LIN / MOFFATT & NICHOL
825 BATTERY STREET
SAN FRANCISCO, CA 94111

Caltrans now has a web site! To get to the web site, go to: http://www.dot.ca.gov

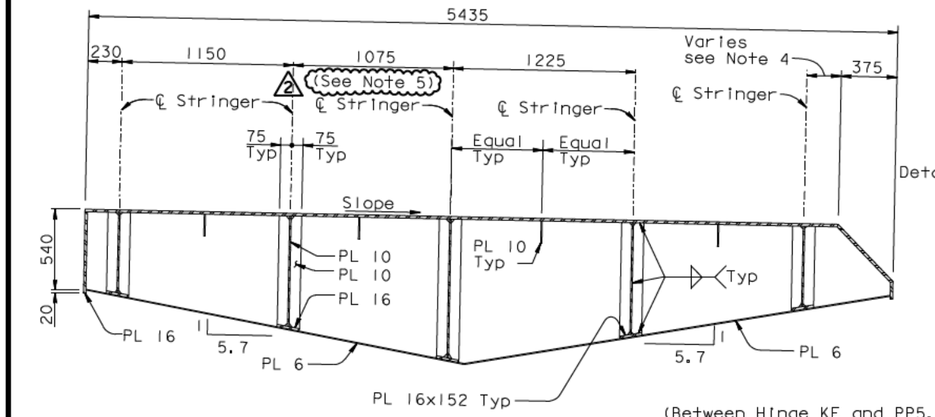

TYPICAL SECTION C-C
1:20

(Between Hinge KE and PP5.5, PP7.5 and PP117)
(Section C'-C' similar, between PP121 and PP128)

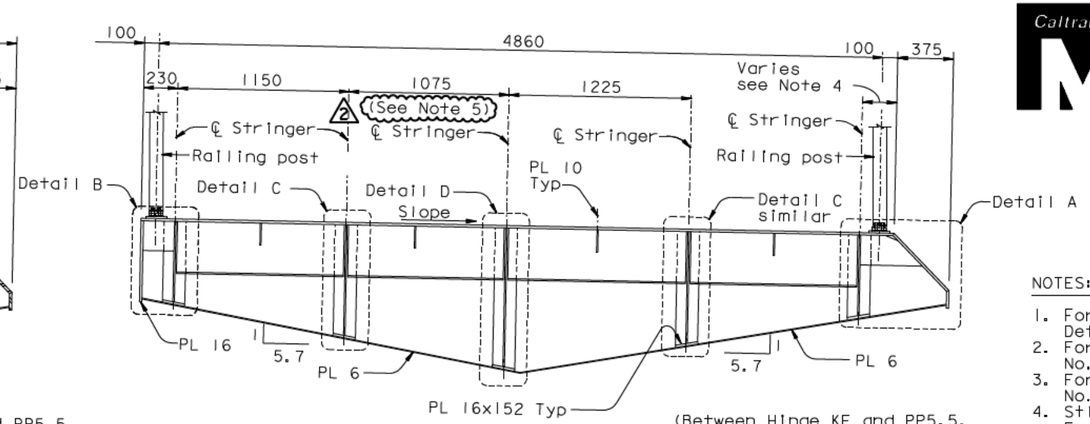

TYPICAL SECTION D-D
1:20

(Between Hinge KE and PP5.5, PP7.5 and PP117)
(Section D'-D' similar between PP121 and 128)

NOTES:

1. For Section locations, see "Bikepath Framing Details" sheets.
2. For Details A through D, see "Bikepath Details No.3" sheet.
3. For Details E through H, see "Bikepath Details No.12" sheet.
4. Stiffener location varies from PP127 to Hinge A. For details see "Bikepath Framing Details No.6" sheet.
5. At the Contractor's option, the center stringer may be shifted to maintain a constant distance from the bend line.

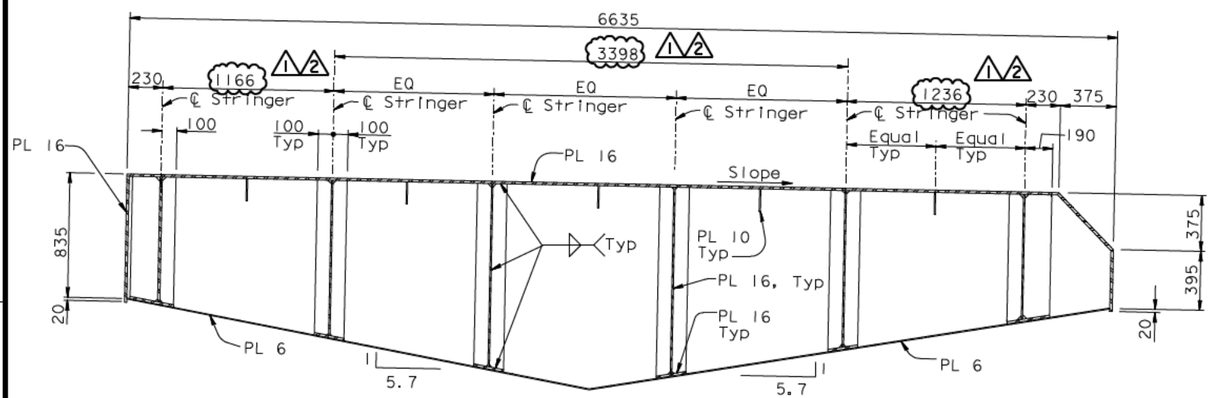

SECTION E-E
1:20

(Between PP117 & PP121)

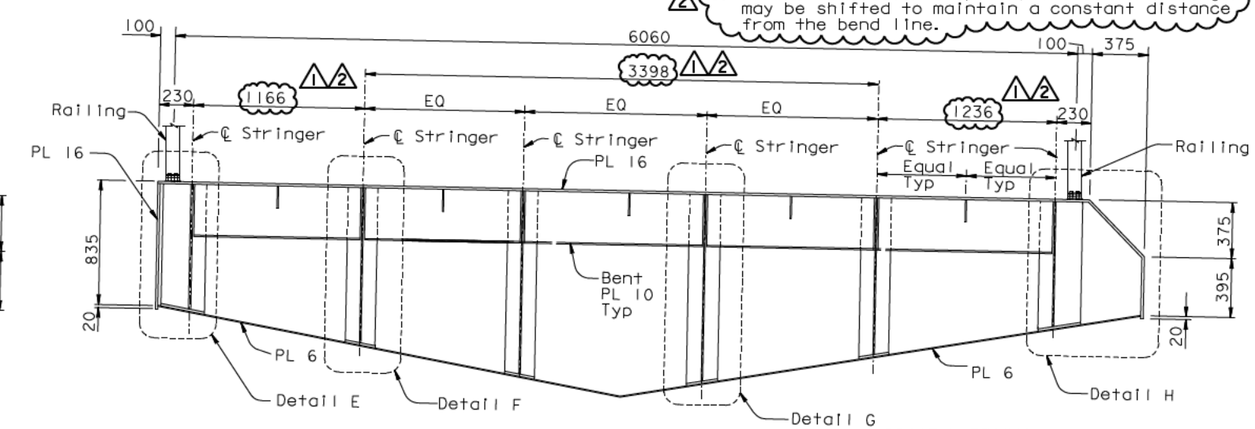

SECTION F-F
1:20

(Between PP117 & PP121)

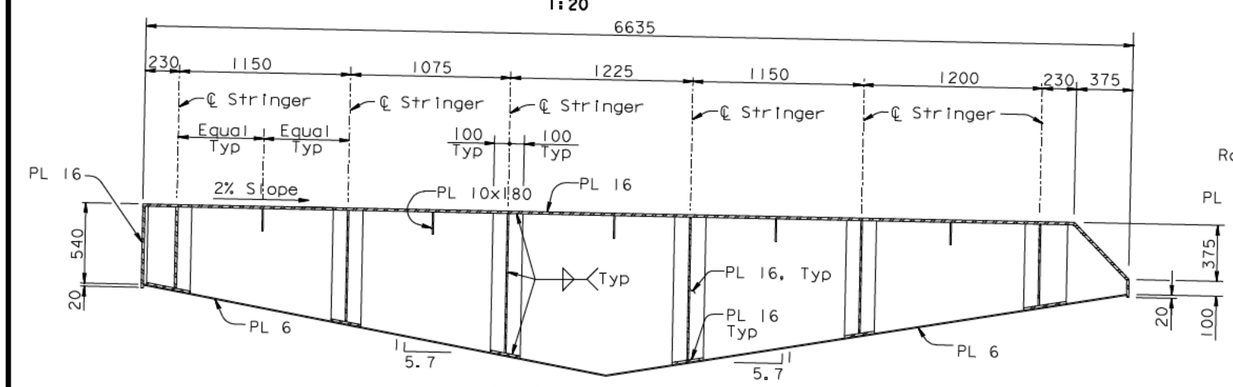

SECTION G-G
1:20

(Between PP5.5 and PP7.5)

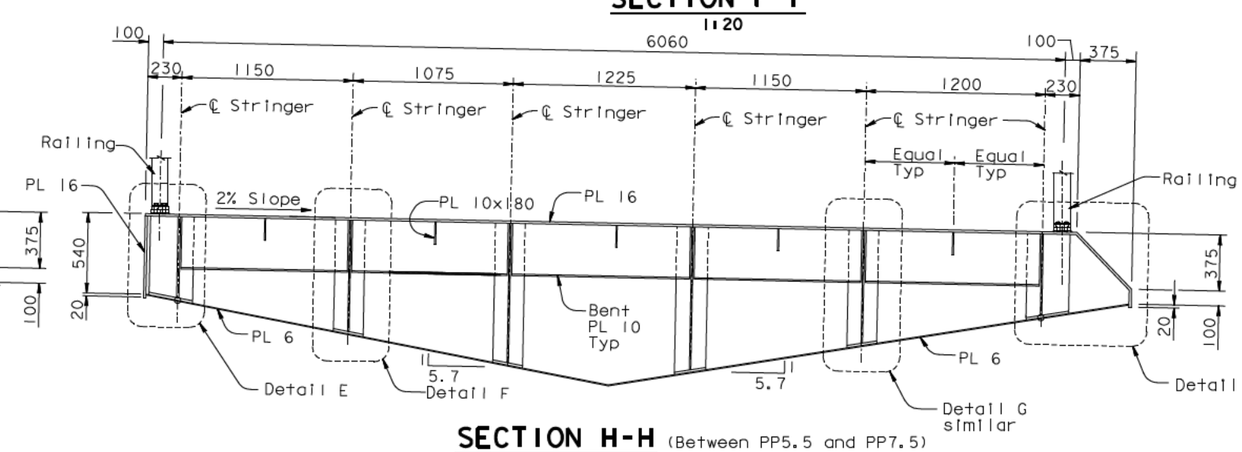

SECTION H-H
1:20

(Between PP5.5 and PP7.5)

ALL DIMENSIONS ARE IN MILLIMETERS UNLESS OTHERWISE SHOWN

CONTRACT CHANGE ORDER NO. ____
SHEET ___ OF ___

REQUESTS FOR INFORMATION NOT ADDRESSED IN THIS CCO REMAIN IN FORCE

R. Valizadeh/V. Toan/Y.L./W.L./F.C.
DESIGN OVERSIGHT
Roya Valizadeh / Vong Toan / Y. Liu
SIGN OFF DATE 09/25/09

Rev. Date: 5-18-98

MARK	DATE	DESCRIPTIONS	BY	CH'D	CCO#
2	09/25/09	BIKEPATH DETAILS	TH	HT	99
1	11/26/08	BIKEPATH DETAILS	TH	MN	99

REVISIONS

DESIGN	BY T. Ho	CHECKED T. McMeans	
DETAILS	BY R. Xu	CHECKED P. Ritchie	
QUANTITIES	BY C. Bernardo	CHECKED S. Shi	

PREPARED FOR THE STATE OF CALIFORNIA DEPARTMENT OF TRANSPORTATION

R. Manzanarez
PROJECT ENGINEER

BRIDGE NO. 34-0006L/R
KILOMETER POST 13.2/13.9

SAN FRANCISCO OAKLAND BAY BRIDGE
EAST SPAN SEISMIC SAFETY PROJECT
SELF-ANCHORED SUSPENSION BRIDGE
(SUPERSTRUCTURE & TOWER)

BIKEPATH DETAILS NO. 2

ORIGINAL SCALE IN MILLIMETERS FOR REDUCED PLANS 0 10 20 30 40 50 60 70 80 90 100

CU 04
EA 0120F1

DISREGARD PRINTS BEARING EARLIER REVISION DATES

REVISION DATES (PRELIMINARY STAGE ONLY): 05/24/01 04/08/02 07/01/02 12/19/02

SHEET 409R2 OF

100 % PS&E

USERNAME => dwinrow DATE PLOTTED => 25 SEP 2009 TIME PLOTTED => 15:54:06

FILE -> I:\bb\04-012001\sas\contract plans and cco\cco\cco#99\9-revision 09-25-09\dgn\agbwd02.dgn