DIST.	COUNTY	ROUTE	KILOMETER POST TOTAL PROJECT	SHEET NO.	TOTAL SHEETS
04	SF	80	13.2/13.9	824SIRI	1204

REGISTERED ENGINEER - CIVIL

07-27-09
PLANS APPROVAL DATE

REGISTERED PROFESSIONAL ENGINEER Tien Hung Ho No. C 43990 Exp. 06/30/11 CIVIL STATE OF CALIFORNIA

The State of California or its officers or agents shall not be responsible for the accuracy or completeness of electronic copies of this plan sheet.

T.Y. LIN / MOFFATT & NICHOL
825 BATTERY STREET
SAN FRANCISCO, CA 94111

Caltrans now has a web site! To get to the web site, go to: http://www.dot.ca.gov

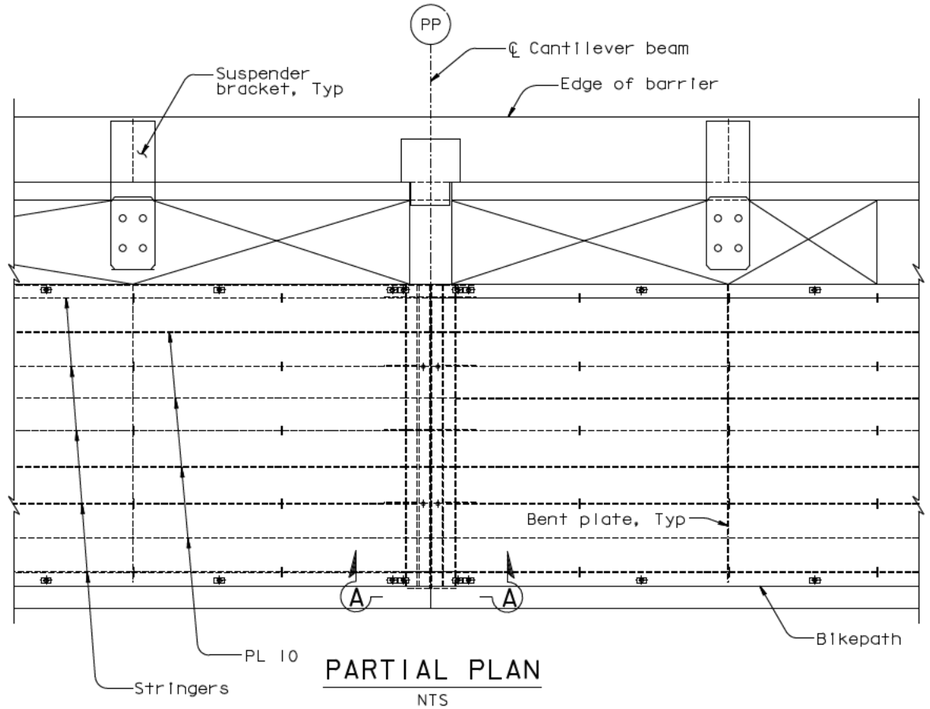

PARTIAL PLAN
NTS

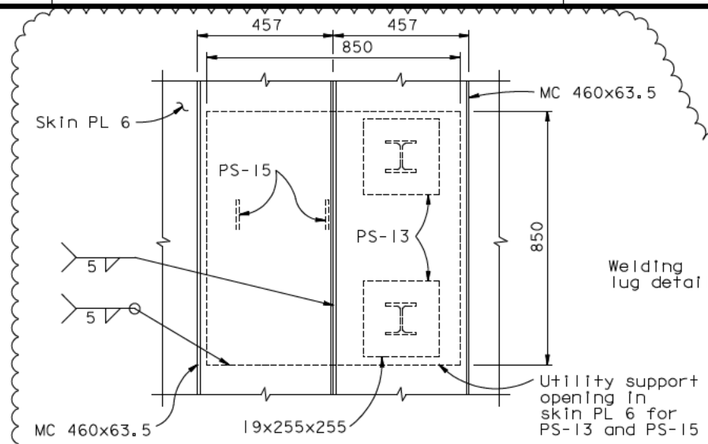

DETAIL B
1:10

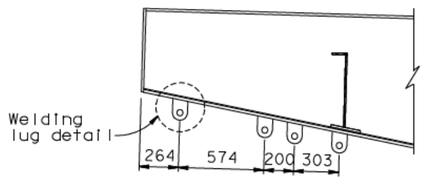

SECTION P-P
1:20
(Traveler rails not shown)

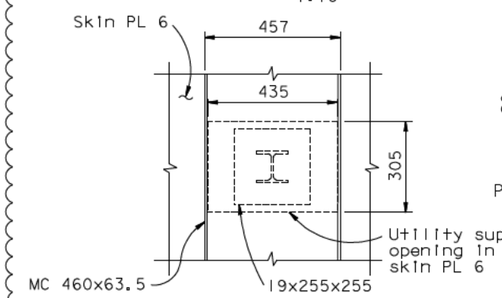

DETAIL C
1:10

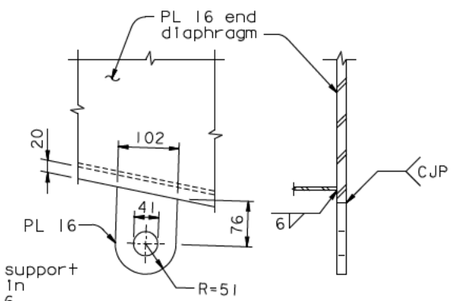

WELDING LUG DETAIL
1:5

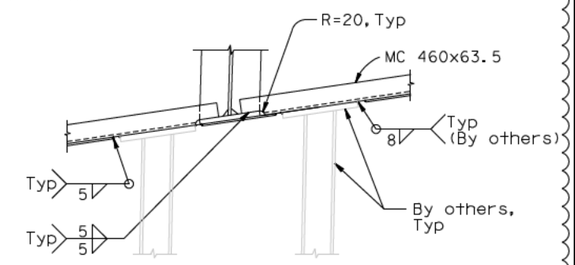

SECTION M-M
1:10

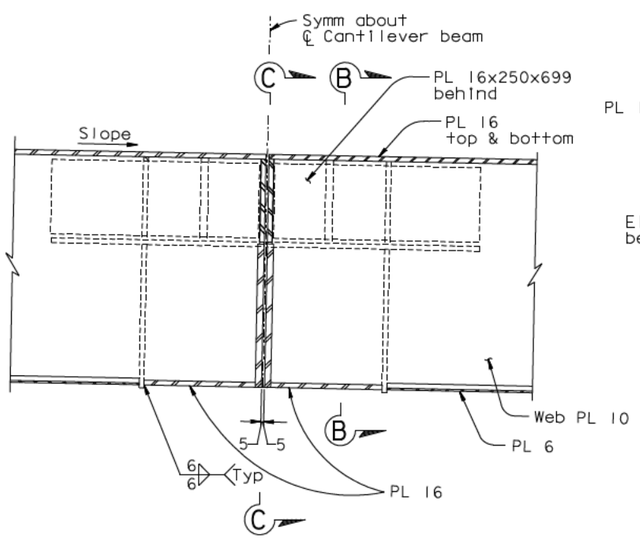

SECTION A-A (Cantilever Beam Not Shown For Clarity)
NTS

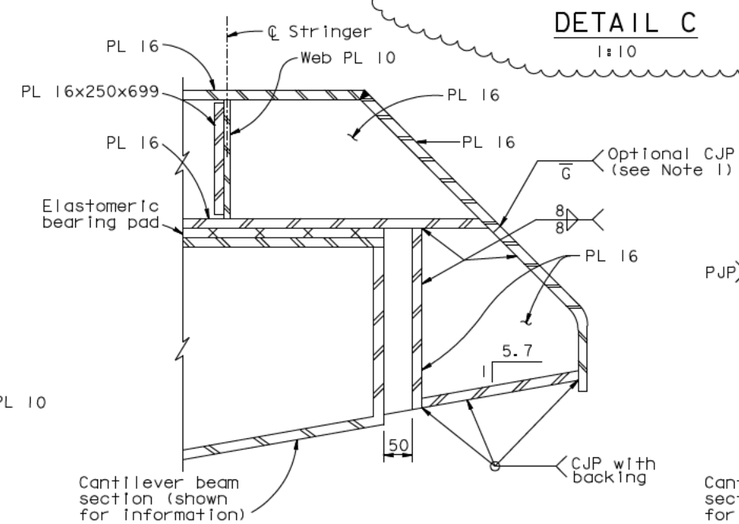

SECTION B-B
NTS

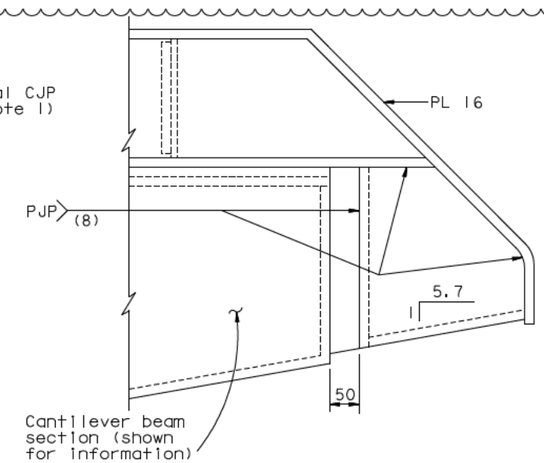

SECTION C-C
NTS

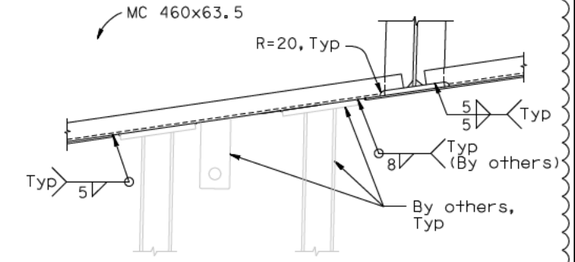

SECTION N-N
1:10

NOTES:

1. For Bikepath segments that have been fabricated without a "Closure Box", a CJP shall be used.

CONTRACT CHANGE ORDER NO. _____
SHEET ____ OF ____

REQUESTS FOR INFORMATION NOT ADDRESSED IN THIS CCO REMAIN IN FORCE

CLOSURE BOX FOR BIKEPATH BOTTOM PLATE

ALL DIMENSIONS ARE IN MILLIMETERS UNLESS OTHERWISE SHOWN

MARK	DATE	DESCRIPTIONS	BY	CH'D	CCO#
1	08/20/10	BIKEPATH DETAILS	AB	TH	99
0	07/24/09	BIKEPATH DETAILS	CC	TH	99

REVISIONS

R. Vallzadeh/V. Toan/Y.L./W.L./F.C.
DESIGN OVERSIGHT
SIGN OFF DATE 08/20/10

DESIGN BY T. Ho CHECKED G. Baker
DETAILS BY J. Duxbury CHECKED C. Choi
QUANTITIES BY J. Duxbury CHECKED C. Choi

PREPARED FOR THE STATE OF CALIFORNIA DEPARTMENT OF TRANSPORTATION

R. Manzanarez
PROJECT ENGINEER

BRIDGE NO. 34-0006L/R
KILOMETER POST 13.2/13.9

SAN FRANCISCO OAKLAND BAY BRIDGE
EAST SPAN SEISMIC SAFETY PROJECT
SELF-ANCHORED SUSPENSION BRIDGE
(SUPERSTRUCTURE & TOWER)

BIKEPATH FRAMING DETAILS NO. 7

Rev. Date: 5-18-98

ORIGINAL SCALE IN MILLIMETERS FOR REDUCED PLANS 0 10 20 30 40 50 60 70 80 90 100

CU 04
EA 0120F1

DISREGARD PRINTS BEARING EARLIER REVISION DATES 07/27/09

REVISION DATES (PRELIMINARY STAGE ONLY)

SHEET 407SIRI OF

FILE -> I:\bb\04-0120F1\sas\contract plans and cco\cco\cco#99\13-revision 08-20-10\dgn\agbwf07.dgn

100% PS&E

USERNAME -> dwinrow DATE PLOTTED -> 20 AUG 2010 TIME PLOTTED -> 11:05:38