DIST.	COUNTY	ROUTE	KILOMETER POST TOTAL PROJECT	SHEET NO.	TOTAL SHEETS
04	SF	80	13.2/13.9	819R2	1204

REGISTERED ENGINEER - CIVIL

12-6-04
PLANS APPROVAL DATE

REGISTERED PROFESSIONAL ENGINEER Tien Hung Ho No. C 43990 Exp. 6/30/11 CIVIL STATE OF CALIFORNIA

The State of California or its officers or agents shall not be responsible for the accuracy or completeness of electronic copies of this plan sheet.

T.Y. LIN / MOFFATT & NICHOL
825 BATTERY STREET
SAN FRANCISCO, CA 94111

Caltrans now has a web site! To get to the web site, go to: http://www.dot.ca.gov

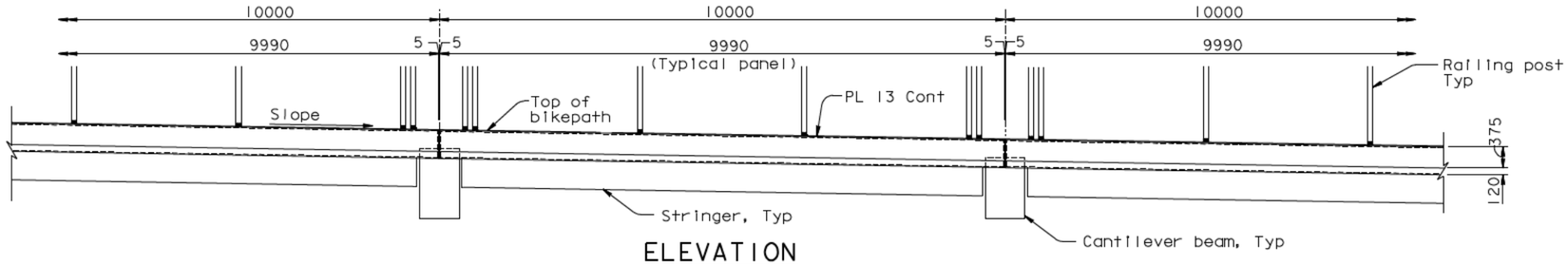

ELEVATION
1:50

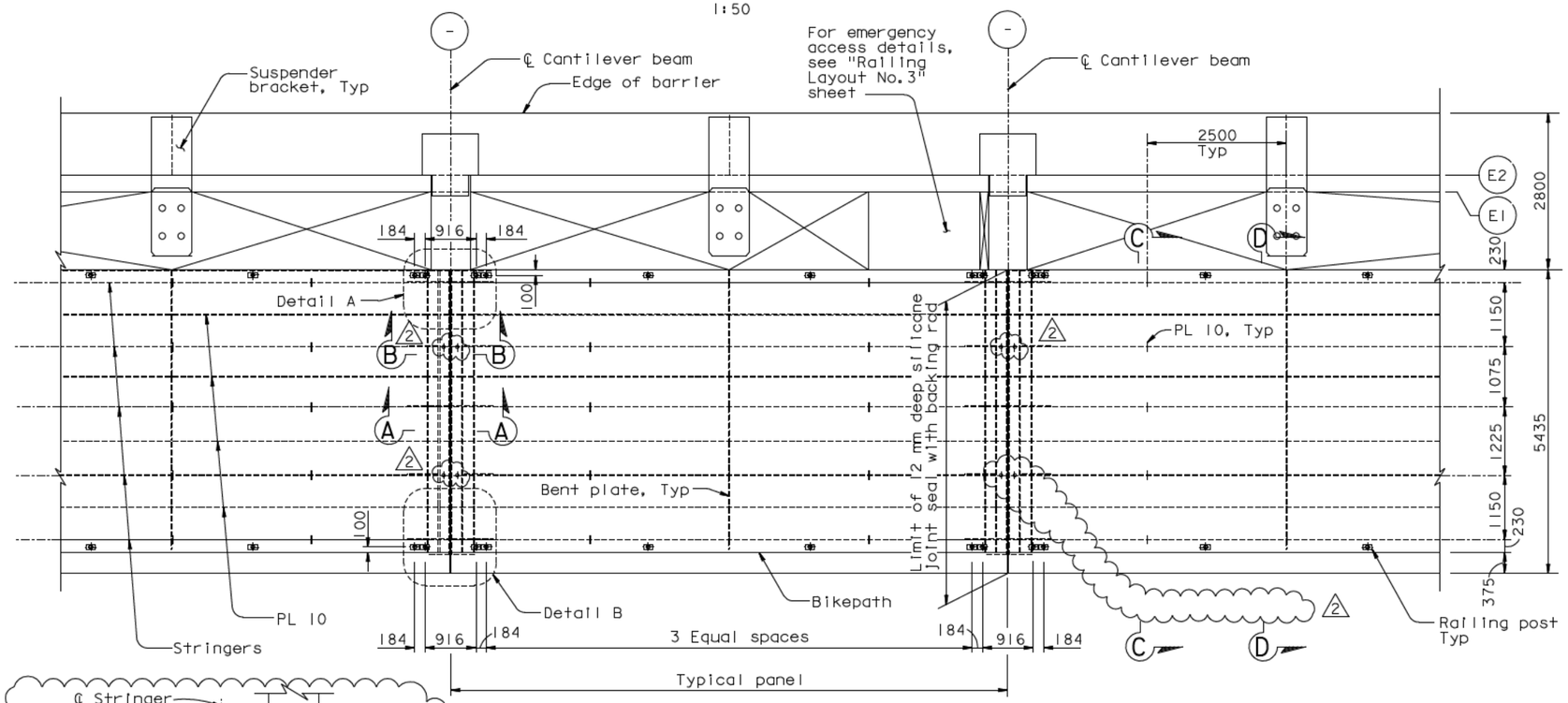

PLAN
1:50

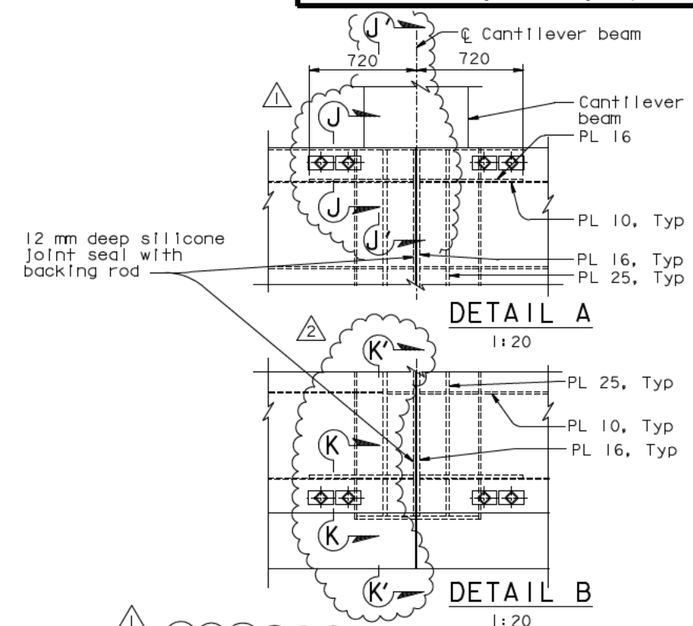

DETAIL A
1:20

DETAIL B
1:20

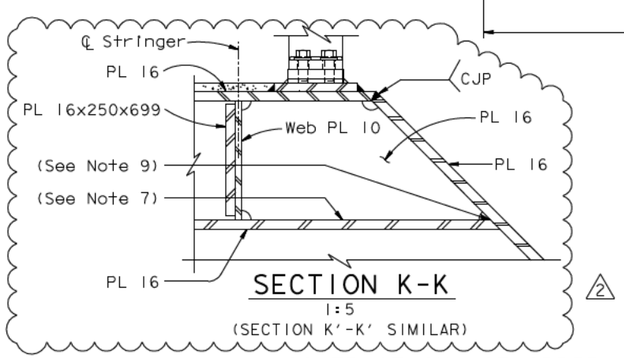

SECTION K-K
1:5
(SECTION K'-K' SIMILAR)

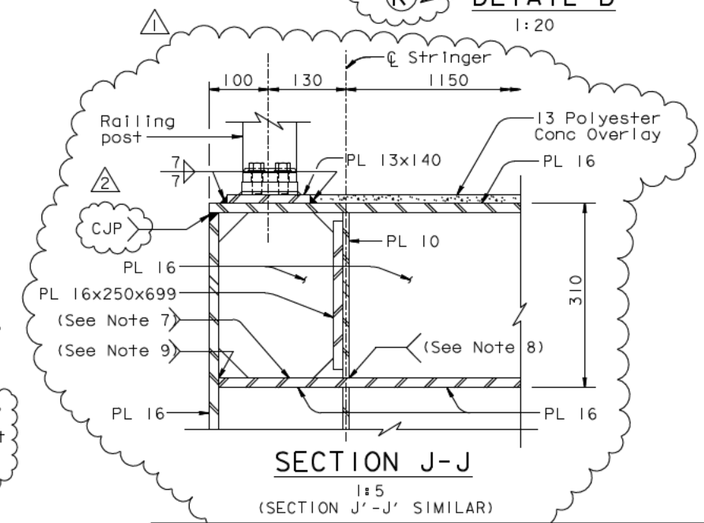

SECTION J-J
1:5
(SECTION J'-J' SIMILAR)

NOTES:

1. For cantilever beam details, see "Bikepath Details" sheets.
2. For Sections A-A and B-B, see Bikepath Details" No. 4" sheet.
3. For Sections C-C and D-D, see "Bikepath Details No. 2" sheet.
4. For stringer details, see "Bikepath Details" sheets.
5. For railing layout, see "Railing Layout" sheets.
6. For emergency access location and details, see "Railing Layout" and "Railing Details" sheets.
7. At the Contractor's option, tight-fit is acceptable, subject to review and approval of the Engineer.
8. At the Contractor's option, 12mm single-sided fillet weld is acceptable, subject to review and approval of the Engineer.
9. At the Contractor's option, CJP with backing may be used, subject to review and approval of the Engineer.

LEGEND:

(-) Indicates Panel Point

CONTRACT CHANGE ORDER NO. _____
SHEET ____ OF ____

REQUESTS FOR INFORMATION NOT ADDRESSED IN THIS CCO REMAIN IN FORCE

ALL DIMENSIONS ARE IN MILLIMETERS UNLESS OTHERWISE SHOWN

R. Vallzadeh/V. Toan/Y.L./W.L./F.C.
DESIGN OVERSIGHT
Ryan Vallzadeh / Vong Toan / Y. Liu
SIGN OFF DATE 08/20/10

MARK	DATE	DESCRIPTIONS	BY	CH'D	CCO#
2	08/20/10	BIKEPATH DETAILS	CC	TH	99
1	07/24/09	BIKEPATH DETAILS	CC	TH	99

REVISIONS

	BY	CHECKED
DESIGN	T. Ho	T. McMeans
DETAILS	R. Xu	P. Ritchie
QUANTITIES	C. Bernardo	S. Shi

PREPARED FOR THE STATE OF CALIFORNIA DEPARTMENT OF TRANSPORTATION

R. Manzanarez
PROJECT ENGINEER

BRIDGE NO. 34-0006L/R
KILOMETER POST 13.2/13.9

SAN FRANCISCO OAKLAND BAY BRIDGE
EAST SPAN SEISMIC SAFETY PROJECT
SELF-ANCHORED SUSPENSION BRIDGE
(SUPERSTRUCTURE & TOWER)

BIKEPATH FRAMING DETAILS NO. 1

Rev. Date: 5-18-98

ORIGINAL SCALE IN MILLIMETERS FOR REDUCED PLANS 0 10 20 30 40 50 60 70 80 90 100

CU 04
EA 0120F1

DISREGARD PRINTS BEARING EARLIER REVISION DATES

REVISION DATES (PRELIMINARY STAGE ONLY) 05/31/01 04/08/02 07/04/02 12/19/02

SHEET 402R2 OF

FILE -> I:\bb\04-012001\sas\contract plans and cco\cco\cco#99\13-revision 08-20-10\dgn\agbwf01.dgn

100% PS&E

USERNAME -> dwinrow DATE PLOTTED -> 20 AUG 2010 TIME PLOTTED -> 10:59:08