DIST.	COUNTY	ROUTE	KILOMETER POST TOTAL PROJECT	SHEET NO.	TOTAL SHEETS
04	SF	80	13.2/13.9	802S2	1204

REGISTERED ENGINEER - CIVIL

10-22-10
PLANS APPROVAL DATE

REGISTERED PROFESSIONAL ENGINEER Marwan N. Nader No. C 054426 Exp. 12/31/11 CIVIL STATE OF CALIFORNIA

The State of California or its officers or agents shall not be responsible for the accuracy or completeness of electronic copies of this plan sheet.

T.Y. LIN / MOFFATT & NICHOL
825 BATTERY STREET
SAN FRANCISCO, CA 94111

Caltrans now has a web site! To get to the web site, go to: http://www.dot.ca.gov

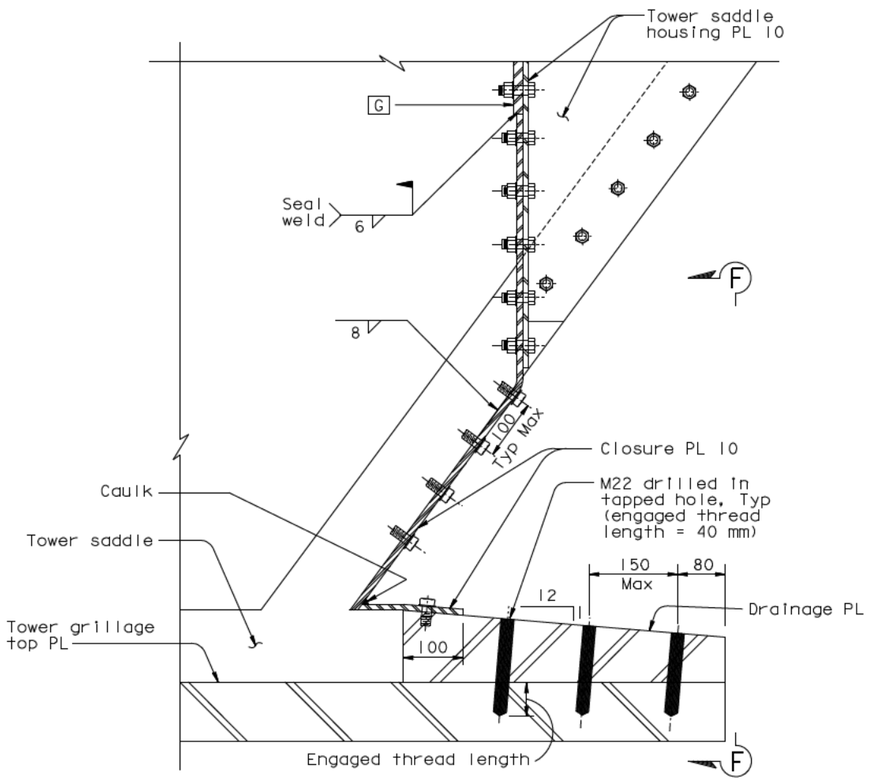

DETAIL B (At Main Span Face)
1:5

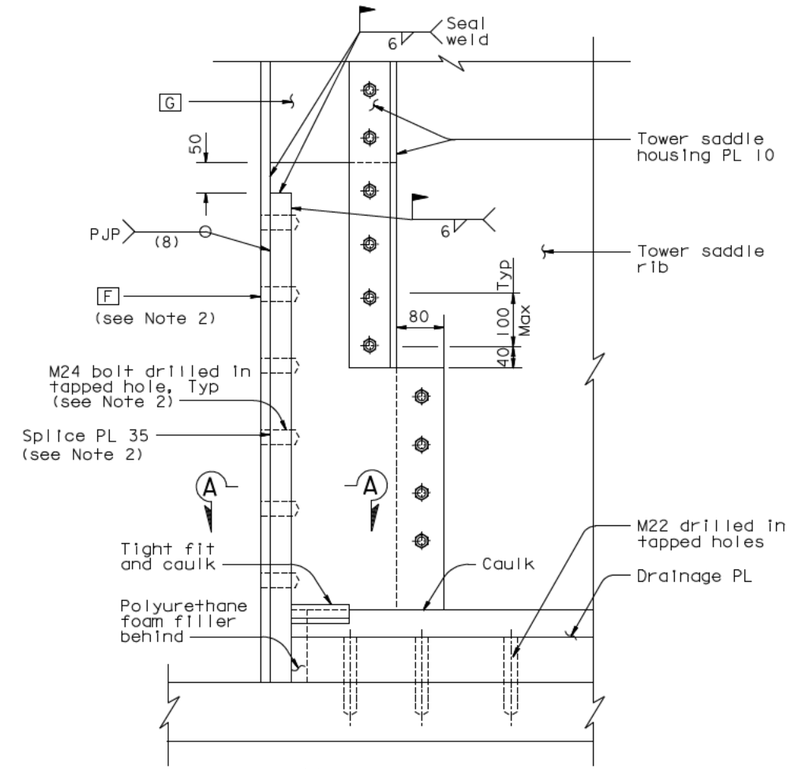

VIEW F-F (At Main Span Face)
1:5

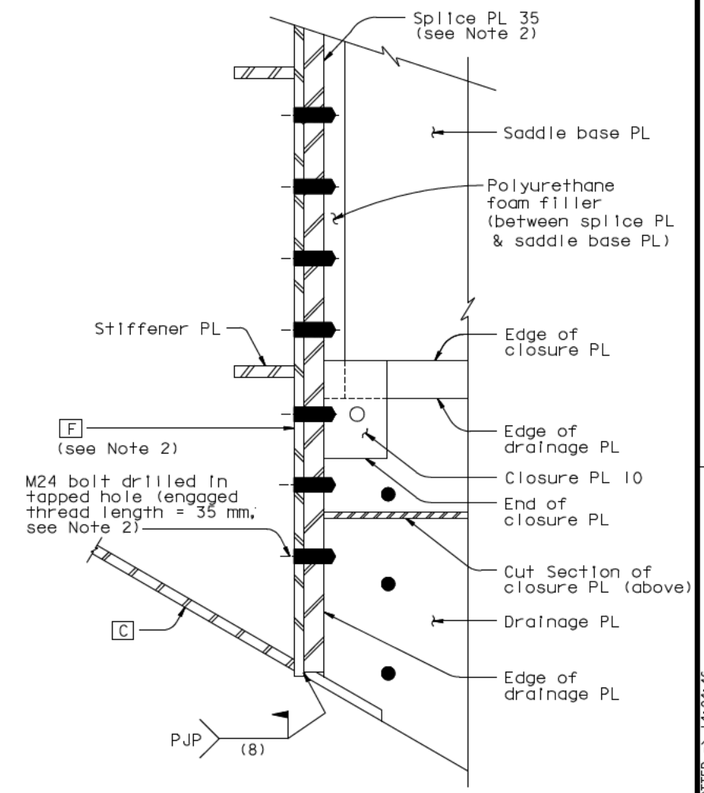

SECTION A-A (At Main Span Face)
1:5

LEGEND:

A Tower head skin PL A

NOTES:

1. All exposed bolts shall be stainless steel bolts.
2. At the Contractor's option, grip plate may be replaced by Splice Plate 35 with tapped holes for M24 A325MT bolts. Standard oversized holes in the tower head F plate may be used.

AT MAIN SPAN FACE

ALTERNATIVE CLOSURE PL & SPLICE PL DETAILS

CONTRACT CHANGE ORDER NO. _____
SHEET ____ OF ____

REQUESTS FOR INFORMATION NOT ADDRESSED IN THIS CCO REMAIN IN FORCE

ALL DIMENSIONS ARE IN MILLIMETERS UNLESS OTHERWISE SHOWN

100 % PS&E

R. Vallzadeh/V. Toan/Y.L./W.L./F.C.
SIGN OFF DATE 10/22/10

MARK	DATE	DESCRIPTIONS	BY	CH'D	CCO#
0	10/22/10	TOWER HEAD DETAILS	NV	MN	93

REVISIONS

DESIGN	BY N. Vo	CHECKED M. Nader	
DETAILS	BY N. Vo	CHECKED M. Nader	
QUANTITIES	BY N. Vo	CHECKED M. Nader	

PREPARED FOR THE STATE OF CALIFORNIA DEPARTMENT OF TRANSPORTATION

R. Manzanarez
PROJECT ENGINEER

BRIDGE NO. 34-0006L/R
KILOMETER POST 13.2/13.9

SAN FRANCISCO OAKLAND BAY BRIDGE
EAST SPAN SEISMIC SAFETY PROJECT
SELF-ANCHORED SUSPENSION BRIDGE
(SUPERSTRUCTURE & TOWER)

TOWER SADDLE HOUSING DETAILS NO. 2B

Rev. Date: 5-18-98

ORIGINAL SCALE IN MILLIMETERS FOR REDUCED PLANS 0 10 20 30 40 50 60 70 80 90 100

CU 04
EA 0120F1

DISREGARD PRINTS BEARING EARLIER REVISION DATES 10/22/10

REVISION DATES (PRELIMINARY STAGE ONLY)

SHEET 385S2 OF

FILE -> I:\bb\04-012001\sas\contract plans and cco\cco\cco#93\7-revision 10-22-10\dgn\agshd04c.dgn

USERNAME -> dwinrow DATE PLOTTED -> 21 OCT 2010 TIME PLOTTED -> 14:04:46