DIST.	COUNTY	ROUTE	KILOMETER POST TOTAL PROJECT	SHEET NO.	TOTAL SHEETS
04	SF	80	13.2/13.9	800S4	1204

REGISTERED ENGINEER - CIVIL

10-22-10
PLANS APPROVAL DATE

The State of California or its officers or agents shall not be responsible for the accuracy or completeness of electronic copies of this plan sheet.

REGISTERED PROFESSIONAL ENGINEER Marwan N. Nader No. C 054426 Exp. 12/31/11 CIVIL STATE OF CALIFORNIA

T.Y. LIN / MOFFATT & NICHOL
825 BATTERY STREET
SAN FRANCISCO, CA 94111

Caltrans now has a web site! To get to the web site, go to: http://www.dot.ca.gov

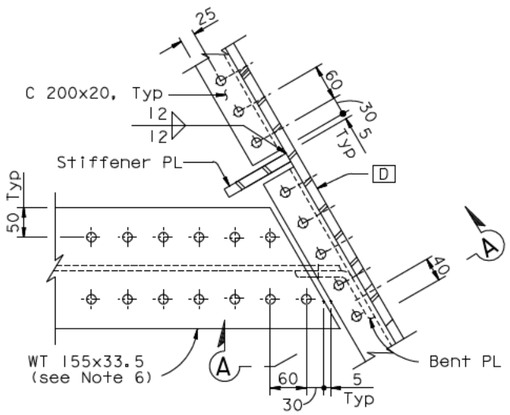

DETAIL F' (Diaphragm PL not shown for clarity)
1:5

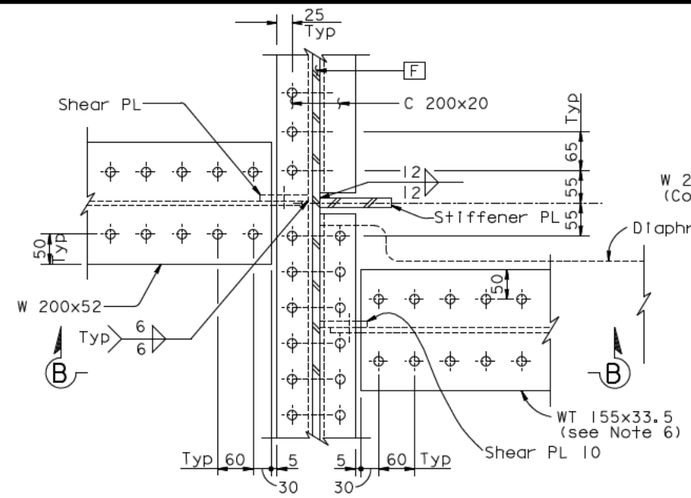

DETAIL G' (Diaphragm PL not shown for clarity)
1:5

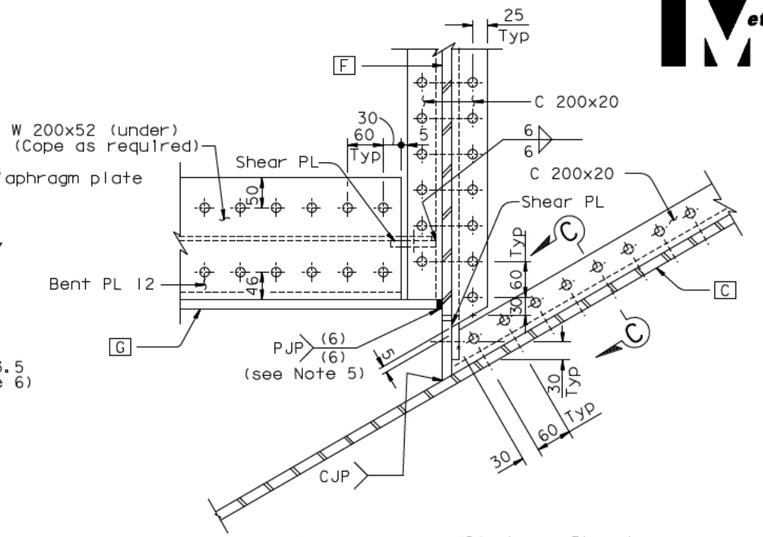

DETAIL H' (Diaphragm PL not shown for clarity)
1:5

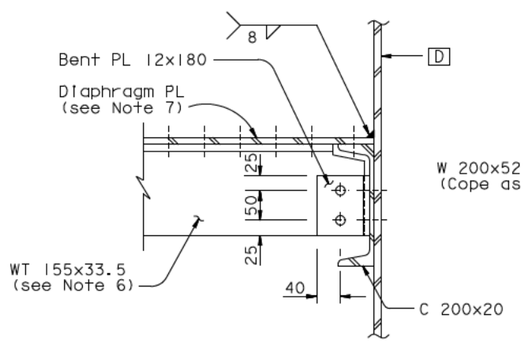

SECTION A-A (Typical WT to C connection)
1:5

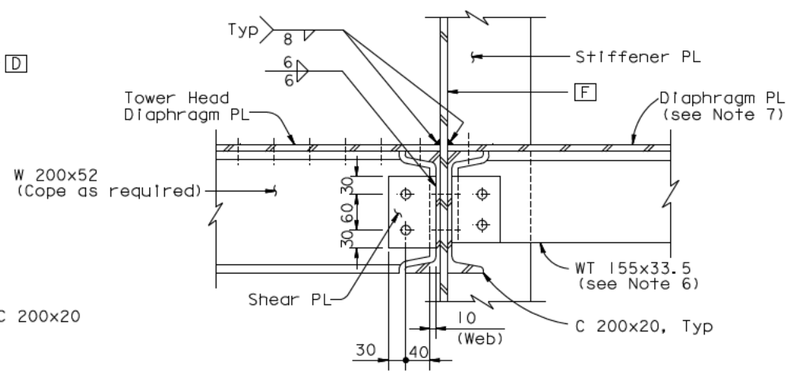

SECTION B-B (Typical WF to C connection)
1:5

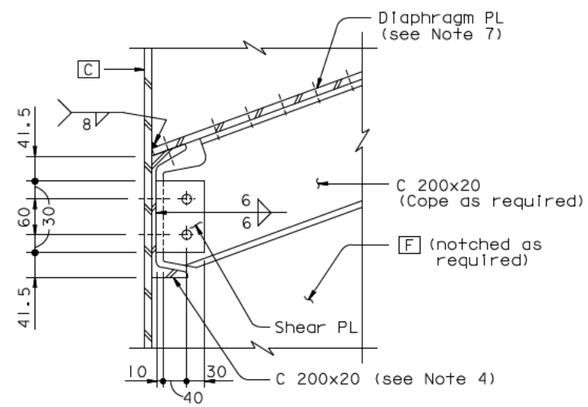

SECTION C-C
1:5

LEGEND:

A Tower head skin PL A

NOTES:

1. For connection details, see bolted connection schedule on "Tower Head Details No.4" sheet.
2. All details shall account for the actual slope and curvature of the tower head diaphragm.
3. For details not shown, see other "Tower Head Details" sheets.
4. At the Contractor's option, 12 mm bent plate may be used in lieu of bent channel for faces C and D, subject to review and approval of the Engineer.
5. At the Contractor's option, a field weld CJP with backing to remain (weld inspected per PJP requirement) may be used in lieu of the double sided PJP, subject to review and approval of the Engineer.
6. At the Contractor's option, W 310x67 cut in half or W 200x52 cut with d=155 may be used in lieu of WT 155x33.5, subject to review and approval of the Engineer.
7. At the Contractor's option, diaphragm PL 12 confined by C, D and F may be constructed from 3 straight diaphragm panels consistent with curved profile of the Tower Head Diaphragm.

CONTRACT CHANGE ORDER NO. ____
SHEET ____ OF ____

REQUESTS FOR INFORMATION NOT ADDRESSED IN THIS CCO REMAIN IN FORCE

ALL DIMENSIONS ARE IN MILLIMETERS UNLESS OTHERWISE SHOWN

R. Vallzadeh/V. Toan/Y.L./W.L./F.C.
DESIGN OVERSIGHT
SIGN OFF DATE 10/22/10

MARK	DATE	DESCRIPTIONS	BY	CH'D	CCO#
0	10/22/10	TOWER HEAD DETAILS	NV	MN	93

REVISIONS

DESIGN	BY M. Nader	CHECKED	S. Camo
DETAILS	BY R. kanitkar	CHECKED	G. Baker
QUANTITIES	BY R. kanitkar	CHECKED	Y. Zhang

PREPARED FOR THE STATE OF CALIFORNIA DEPARTMENT OF TRANSPORTATION

R. Manzanarez
PROJECT ENGINEER

BRIDGE NO. 34-0006L/R
KILOMETER POST 13.2/13.9

SAN FRANCISCO OAKLAND BAY BRIDGE
EAST SPAN SEISMIC SAFETY PROJECT
SELF-ANCHORED SUSPENSION BRIDGE
(SUPERSTRUCTURE & TOWER)

TOWER HEAD DETAILS NO. 11

Rev. Date: 5-18-98

ORIGINAL SCALE IN MILLIMETERS FOR REDUCED PLANS 0 10 20 30 40 50 60 70 80 90 100

CU 04
EA 0120F1

DISREGARD PRINTS BEARING EARLIER REVISION DATES

REVISION DATES (PRELIMINARY STAGE ONLY) 10/22/10

SHEET 383S4 OF

FILE -> I:\bb\04-01200I\sas\contract plans and cco\cco\cco#93\7-revision 10-22-10\dgn\aghed06a.dgn

100 % PS&E

USERNAME -> dwinrow DATE PLOTTED -> 21 OCT 2010 TIME PLOTTED -> 13:52:23