DIST.	COUNTY	ROUTE	KILOMETER POST TOTAL PROJECT	SHEET NO.	TOTAL SHEETS
04	SF	80	13.2/13.9	756R1	1204

Caltrans Metric

REGISTERED ENGINEER - CIVIL

12-6-04
PLANS APPROVAL DATE

REGISTERED PROFESSIONAL ENGINEER Marwan N. Nader No. C 054426 Exp. 12/31/09 CIVIL STATE OF CALIFORNIA

The State of California or its officers or agents shall not be responsible for the accuracy or completeness of electronic copies of this plan sheet.

T.Y. LIN / MOFFATT & NICHOL
825 BATTERY STREET
SAN FRANCISCO, CA 94111

Caltrans now has a web site! To get to the web site, go to: http://www.dot.ca.gov

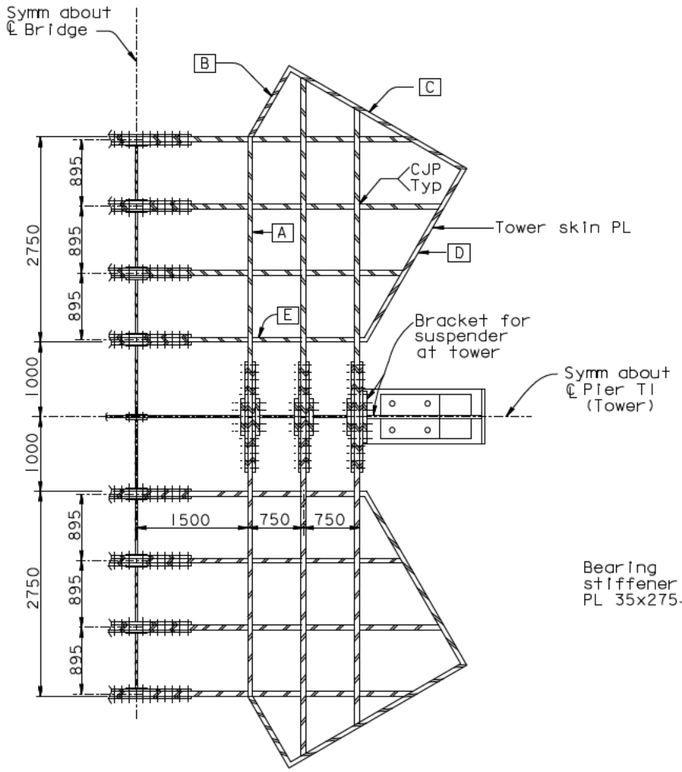

SECTION A-A
1:40

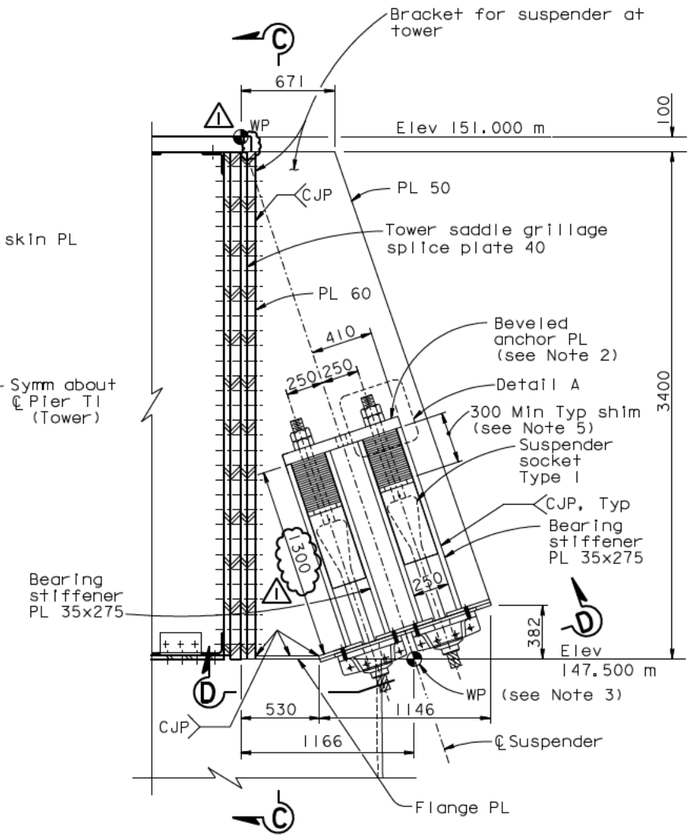

SECTION B-B
1:20

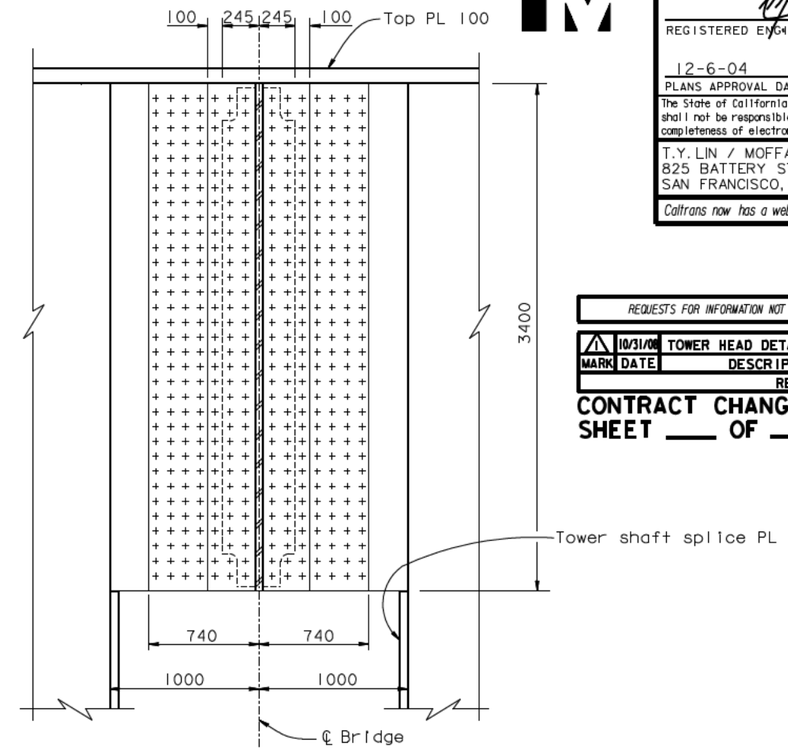

SECTION C-C
1:20

LEGEND:

[A] Tower skin Plate A

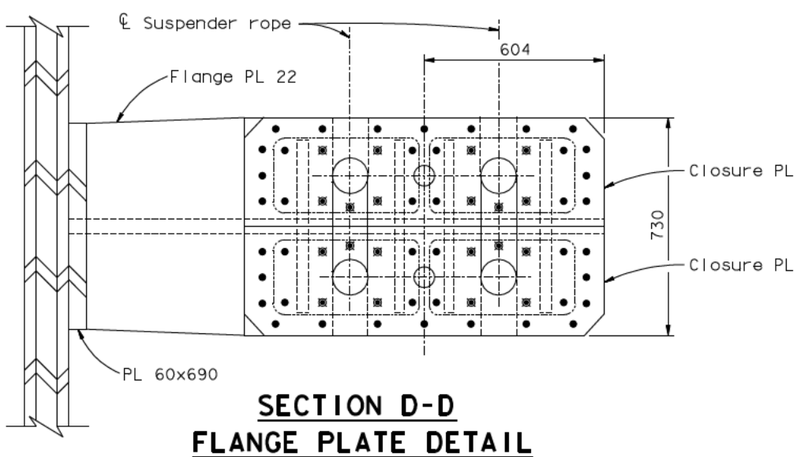

SECTION D-D
FLANGE PLATE DETAIL
1:10

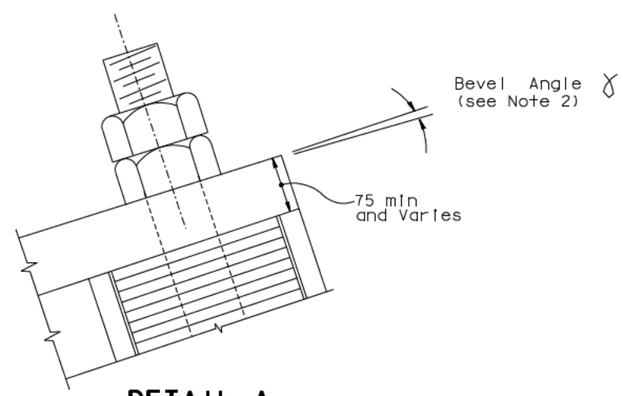

DETAIL A
1:5

NOTES:

1. For details of suspender sockets, socket rods, bearing stiffener plates, closure plates, flange plates, and split collars, see "Suspender Bracket Details" sheets.
2. For details of beveled anchor plates, see "Suspender Bracket Details No.3" and "Suspender Bracket Details No.4" sheets. For degree of bevel γ see Table on "Suspender At Tower Details No.4" sheet.
3. Suspender length "L" is measured from WP at Elev. 147.500 to WP at deck level. For "L" and lower WP, see "Suspender At Tower Details No.4" sheet.
4. For tower saddle grillage details, see "Tower Saddle Grillage Details" sheets.
5. The 300 mm shims is required for future removal to compensate for creep.

REQUESTS FOR INFORMATION NOT ADDRESSED IN THIS CCO REMAIN IN FORCE

MARK	DATE	DESCRIPTIONS	BY	CH'D	CCO#
1	10/31/08	TOWER HEAD DETAILS	MN	GB	93

REVISIONS

CONTRACT CHANGE ORDER NO. ____
SHEET ___ OF ___

ALL DIMENSIONS ARE IN MILLIMETERS UNLESS OTHERWISE SHOWN

R. Valizadeh/V. Toan/Y.L./W.L./F.C.
DESIGN OVERSIGHT
SIGN OFF DATE 10/31/08

DESIGN	BY M. Nader	CHECKED L. Rus	
DETAILS	BY G. Baker	CHECKED L. Rus	
QUANTITIES	BY G. Baker	CHECKED J. Leventini	

PREPARED FOR THE STATE OF CALIFORNIA DEPARTMENT OF TRANSPORTATION

R. Manzanarez
PROJECT ENGINEER

BRIDGE NO. 34-0006L/R
KILOMETER POST 13.2/13.9

SAN FRANCISCO OAKLAND BAY BRIDGE
EAST SPAN SEISMIC SAFETY PROJECT
SELF-ANCHORED SUSPENSION BRIDGE
(SUPERSTRUCTURE & TOWER)

SUSPENDER AT TOWER DETAILS NO. 3

Rev. Date: 5-18-98

ORIGINAL SCALE IN MILLIMETERS FOR REDUCED PLANS 0 10 20 30 40 50 60 70 80 90 100

CU 04
EA 0120F1

DISREGARD PRINTS BEARING EARLIER REVISION DATES 04/08/02 07/01/02 12/19/02

SHEET 339R1 OF

FILE -> I:\bb\04-012001\sas\contract plans and cco\cco\cco#93\revision 1-16-09\dgn\agsad14a.dgn

100% PS&E DATE PLOTTED => 14 JAN 2009 TIME PLOTTED => 15:47:08 USERNAME => tmartorell