DIST.	COUNTY	ROUTE	KILOMETER POST TOTAL PROJECT	SHEET NO.	TOTAL SHEETS
04	SF	80	13.2/13.9	605R1	1204

REGISTERED ENGINEER - CIVIL

12-6-04
PLANS APPROVAL DATE

REGISTERED PROFESSIONAL ENGINEER Marwan N. Nader No. C 054426 Exp. 12/31/11 CIVIL STATE OF CALIFORNIA

The State of California or its officers or agents shall not be responsible for the accuracy or completeness of electronic copies of this plan sheet.

T.Y. LIN / MOFFATT & NICHOL
825 BATTERY STREET
SAN FRANCISCO, CA 94111

Caltrans now has a web site! To get to the web site, go to: http://www.dot.ca.gov

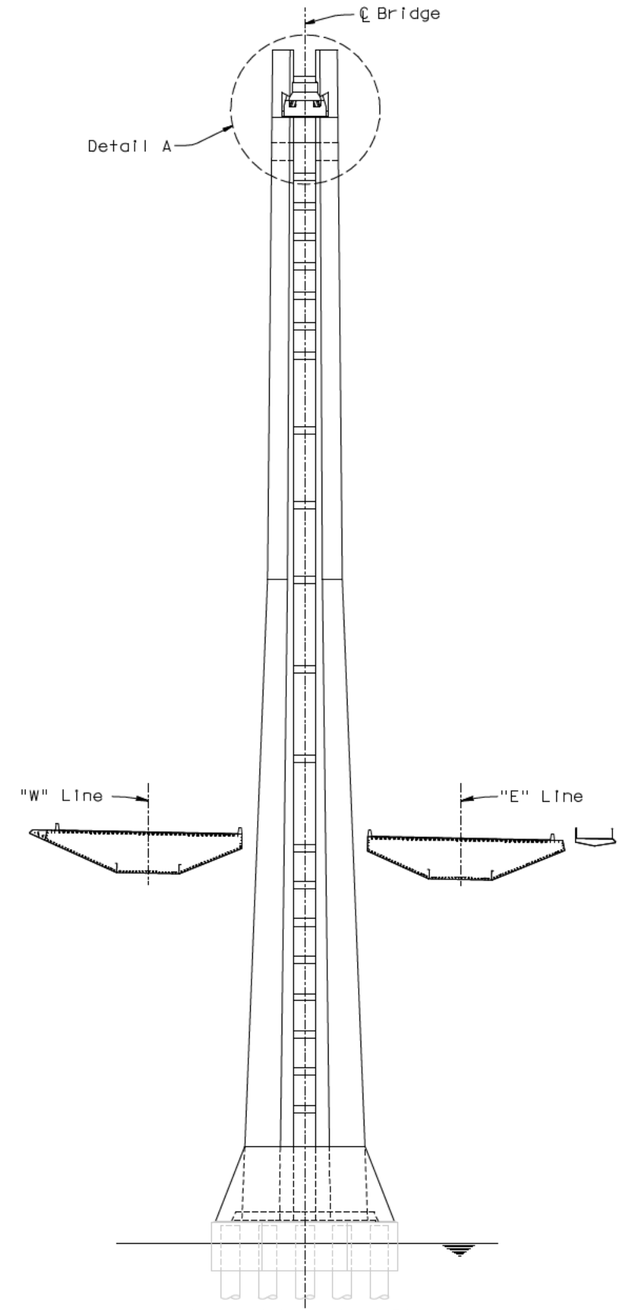

KEY ELEVATION
1:400

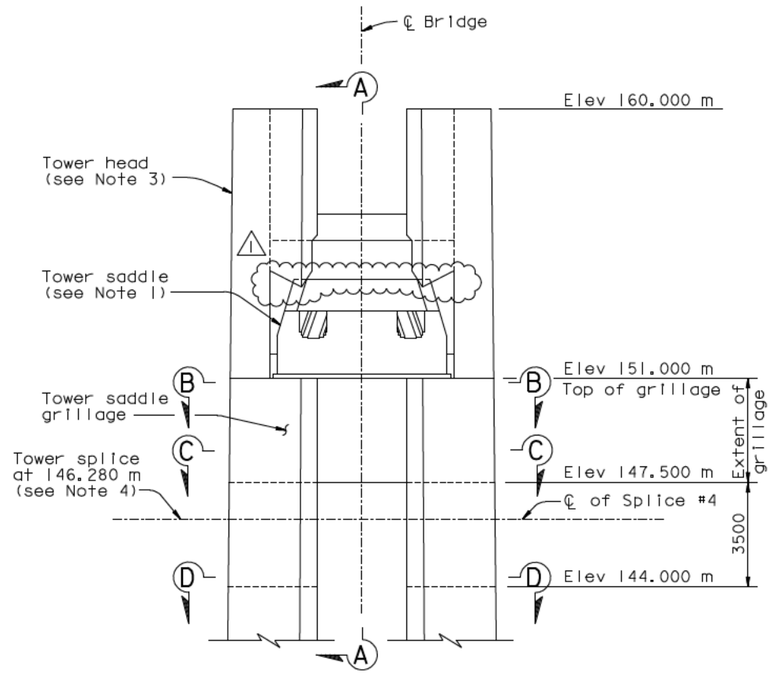

DETAIL A
1:100

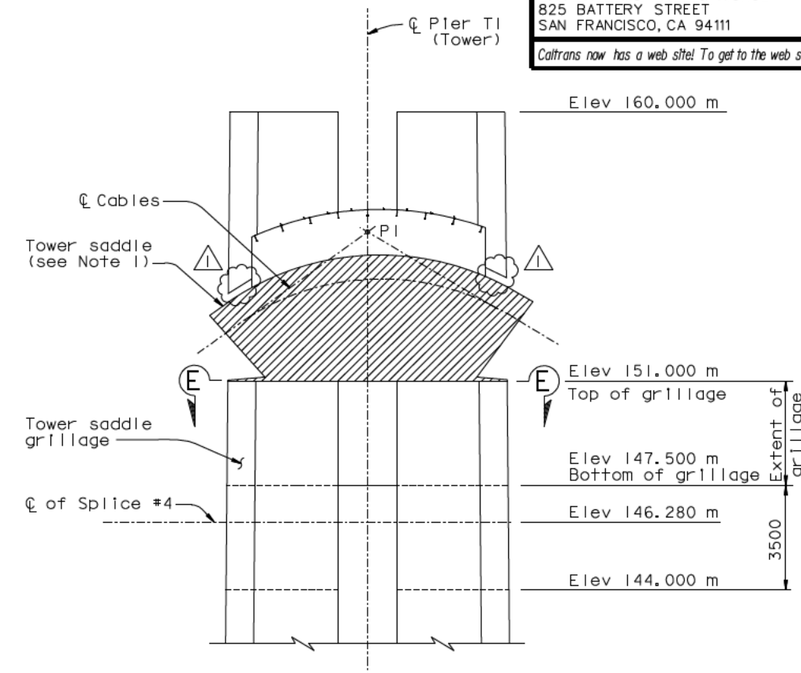

SECTION A-A
1:100

NOTES:

1. For saddle details, see "Tower Saddle Details" sheets.
2. Cable housing not shown for clarity.
3. For tower head details, see "Tower Head Details" sheets.
4. For tower splice at Elev 146.280 m, see "Tower Splice Details" sheets.
5. For Sections B-B, C-C and D-D, see "Tower Saddle Grillage Details No.2" sheet.
6. For Section E-E, see "Tower Saddle Grillage Details No.8" sheet.
7. Bracket for suspender at tower is not shown in the "Tower Saddle Grillage Details" sheets for clarity. For bracket details, see "Suspender At Tower Details" sheets.

CONTRACT CHANGE ORDER NO. ____
SHEET ___ OF ___

REQUESTS FOR INFORMATION NOT ADDRESSED IN THIS CCO REMAIN IN FORCE

ALL DIMENSIONS ARE IN MILLIMETERS UNLESS OTHERWISE SHOWN

R. Vallizadeh/V. Toan/Y.L./W.L./F.C.
DESIGN OVERSIGHT
SIGN OFF DATE 10/22/10

MARK	DATE	DESCRIPTIONS	BY	CH'D	CCO#
1	10/22/10	TOWER HEAD DETAILS	NV	MN	93

REVISIONS

	BY	CHECKED
DESIGN	M. Nader	R. Mayrbaurl
DETAILS	R. Kanitkar	R. Mayrbaurl
QUANTITIES	R. Kanitkar	Y. Zhang

PREPARED FOR THE STATE OF CALIFORNIA DEPARTMENT OF TRANSPORTATION

R. Manzanarez
PROJECT ENGINEER

BRIDGE NO. 34-0006L/R
KILOMETER POST 13.2/13.9

SAN FRANCISCO OAKLAND BAY BRIDGE
EAST SPAN SEISMIC SAFETY PROJECT
SELF-ANCHORED SUSPENSION BRIDGE
(SUPERSTRUCTURE & TOWER)

TOWER SADDLE GRILLAGE DETAILS NO.1

Rev. Date: 5-18-98

ORIGINAL SCALE IN MILLIMETERS FOR REDUCED PLANS 0 10 20 30 40 50 60 70 80 90 100

CU 04
EA 0120F1

DISREGARD PRINTS BEARING EARLIER REVISION DATES

REVISION DATES (PRELIMINARY STAGE ONLY) 01/15/99 05/13/99 08/02/99 05/31/01 04/08/02 07/01/02 12/19/02

SHEET 188R1 OF

FILE -> L:\BB\04-012001\SAS\Contract Plans and CCO\CCO\CCO#93\7-Revision 10-22-10\DGN\aecsg01.dgn

100% PS&E

USERNAME -> dwinrow DATE PLOTTED -> 21 OCT 2010 TIME PLOTTED -> 13:32:54