DIST.	COUNTY	ROUTE	KILOMETER POST TOTAL PROJECT	SHEET NO.	TOTAL SHEETS
04	SF	80	13.2/13.9	943R3	1204

Caltrans Metric

George Baker
REGISTERED ENGINEER - CIVIL
12-6-04
PLANS APPROVAL DATE

REGISTERED PROFESSIONAL ENGINEER George S. Baker No. C57112 Exp. 12/31/05 CIVIL STATE OF CALIFORNIA

The State of California or its officers or agents shall not be responsible for the accuracy or completeness of electronic copies of this plan sheet.

T.Y. LIN / MOFFATT & NICHOL
825 BATTERY STREET
SAN FRANCISCO, CA 94111

Caltrans now has a web site! To get to the web site, go to: http://www.dot.ca.gov

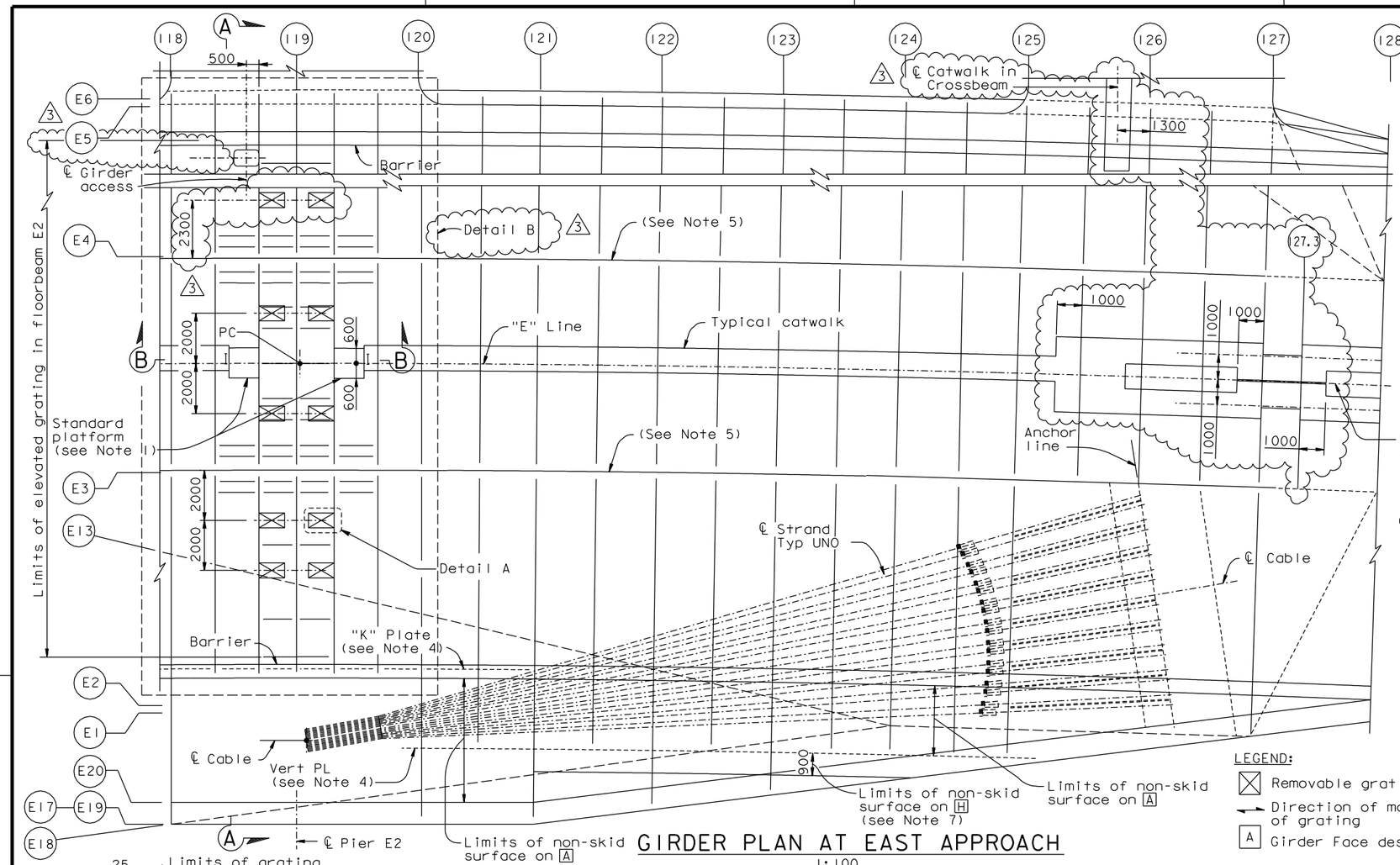

GIRDER PLAN AT EAST APPROACH
1:100

LEGEND:

- Removable grating access
- Direction of main reinforcement of grating
- A Girder Face designation A

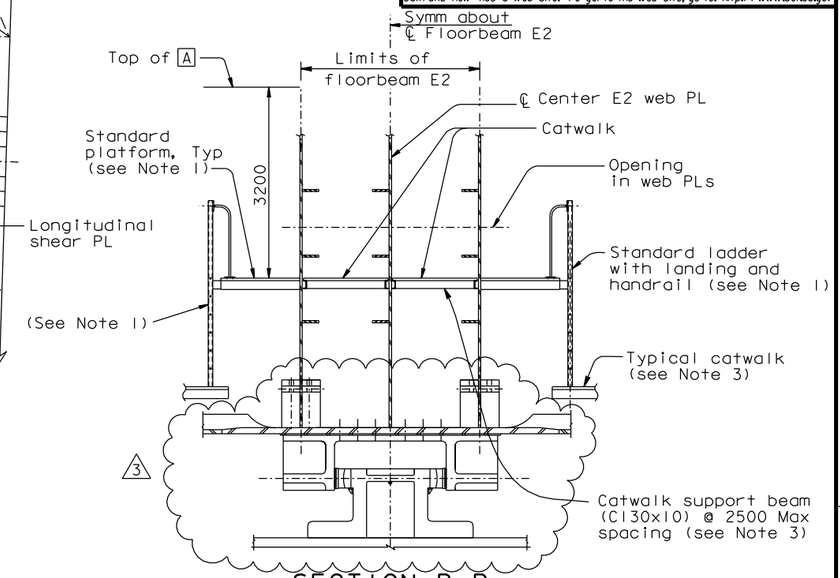

SECTION B-B
1:50

NOTES:

1. For standard platform, ladder and railing, see "Tower Access Details" sheets. Channel 75 ladder rails shall be spaced at 500 mm back-to-back. Landing handrails shall be spaced at 500 mm clear or greater. At the contractor's option, it is acceptable to use A992 Gr 345 or A572 Gr 345 in lieu of A709 Gr 345 for channel 75. (3)
2. For access openings and rungs, see "Typical Girder Details No.15", "Crossbeam At Pier E2", and "Girder At Pier E2" sheets.
3. For catwalk details not shown, see "Girder Access Details No.2" sheet.
4. For "K" plate and vertical plate access openings, see "Girder At East Transition Details" sheets.
5. For access openings in longitudinal shear plates, see "Typical Girder Details No.7" and "Girder At East Transition No.9" sheets.
6. For other access openings, see "Floorbeam At East Transition" sheets.
7. Within limits shown, apply non-skid surface to face H and the upper face of longitudinal stiffeners.
8. Locate crossbeam catwalk 1300 west of west side web.

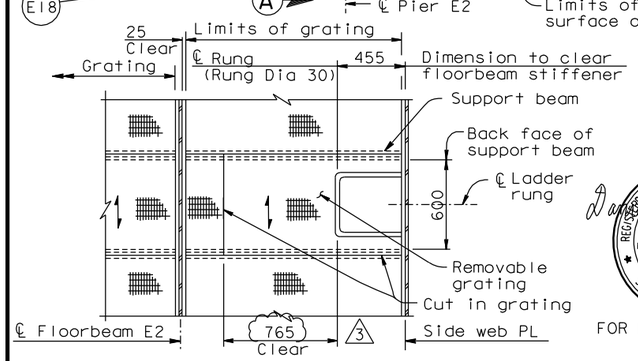

DETAIL A
1:20

REGISTERED PROFESSIONAL ENGINEER Daniel J. Turner No. C 65033 Exp. 06/30/13 CIVIL STATE OF CALIFORNIA

FOR REVISIONS ONLY

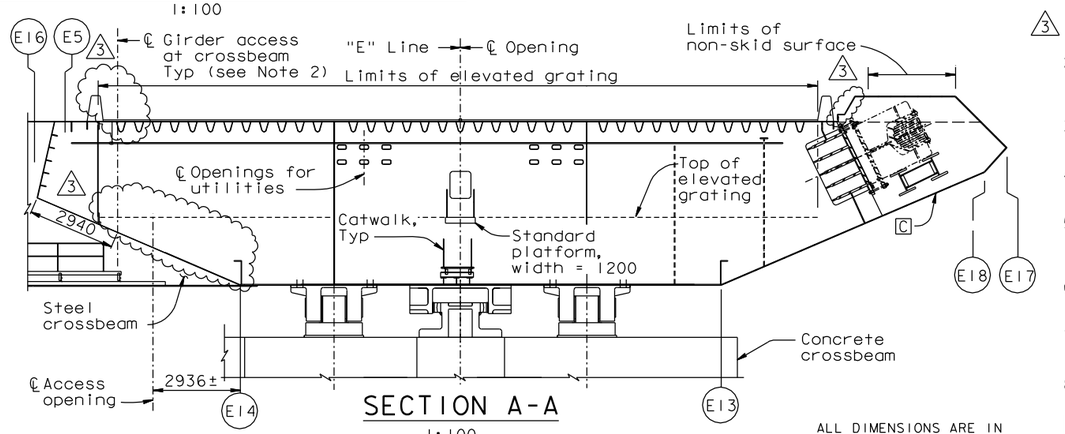

SECTION A-A
1:100

ALL DIMENSIONS ARE IN MILLIMETERS UNLESS OTHERWISE SHOWN

CONTRACT CHANGE ORDER NO. ____
SHEET ____ OF ____

REQUESTS FOR INFORMATION NOT ADDRESSED IN THIS CCO REMAIN IN FORCE

MARK	DATE	DESCRIPTIONS	BY	CH'D	CCO#
3	09/01/11	EAST END OBG	DT	GB	87
2	06/29/11	ADDITIONAL PAINTING	DT	JD	94
1	11/05/10	PP119 ACCESS & PP125 PLATES	GB	DT	86

REVISIONS

R. Valizadeh/V. Toan/Y.L./W.L./F.C.
DESIGN OVERSIGHT
SIGN OFF DATE 09/01/11

Rev. Date: 5-18-98

	BY	CHECKED
DESIGN	G. Baker	T. McMeans
DETAILS	C. Mauch	T. McMeans
QUANTITIES	C. Mauch	J. Leventini

PREPARED FOR THE STATE OF CALIFORNIA DEPARTMENT OF TRANSPORTATION

R. Manzanarez
PROJECT ENGINEER

BRIDGE NO. 34-0006L/R
KILOMETER POST 13.2/13.9

SAN FRANCISCO OAKLAND BAY BRIDGE
EAST SPAN SEISMIC SAFETY PROJECT
SELF-ANCHORED SUSPENSION BRIDGE
(SUPERSTRUCTURE & TOWER)

GIRDER ACCESS DETAILS NO. 3

ORIGINAL SCALE IN MILLIMETERS FOR REDUCED PLANS 0 10 20 30 40 50 60 70 80 90 100

CU 04
EA 0120F1

DISREGARD PRINTS BEARING EARLIER REVISION DATES

REVISION DATES (PRELIMINARY STAGE ONLY) 01/15/99 05/13/99 08/02/99 05/17/01 04/08/02 07/01/02 12/18/02 12/07/05

SHEET 526R3 OF

FILE => I:\bb\04-012001\sas\contract plans and cco\cco\cco#87\1-original 09-01-11\dgn\akacc13.dgn

USERNAME => AL1shansk DATE PLOTTED => 30 AUG 2011 TIME PLOTTED => 14:16:14

100 % PS&E