DIST.	COUNTY	ROUTE	KILOMETER POST TOTAL PROJECT	SHEET NO.	TOTAL SHEETS
04	SF	80	13.2/13.9	878R3	1204

Caltrans Metric

George Baker
REGISTERED ENGINEER - CIVIL
12-6-04
PLANS APPROVAL DATE

REGISTERED PROFESSIONAL ENGINEER George S. Baker No. C57112 Exp. 12/31/05 CIVIL STATE OF CALIFORNIA

The State of California or its officers or agents shall not be responsible for the accuracy or completeness of electronic copies of this plan sheet.

T.Y. LIN / MOFFATT & NICHOL
825 BATTERY STREET
SAN FRANCISCO, CA 94111

Caltrans now has a web site! To get to the web site, go to: http://www.dot.ca.gov

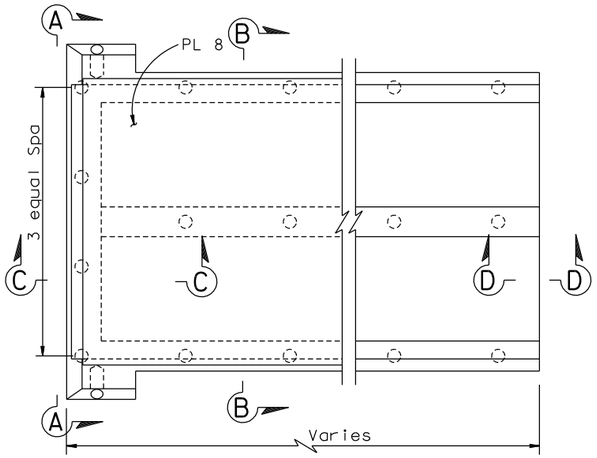

TYPE A

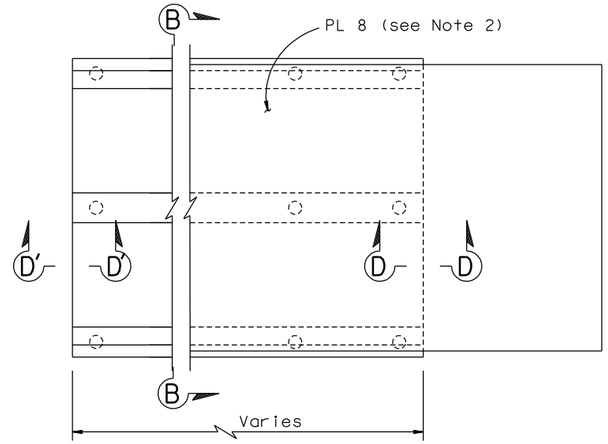

TYPE B

PLAN

DRAINAGE TYPE LOCATION TABLE
See Note 1

PANEL POINT					
TYPE 1			TYPE 2		TYPE 3
W2		E5	W5	E2	E5
10	66	19	9	West of 11	16
12	68	25	12	19	22
14	70	31	18	25	28
16	72	37	23	29	34
18	74	49	25	35	46
20	76	55	30	39	52
22	78	61	35	45	58
24	80	67	37	49	64
26	82	73	46	55	70
28	84	79	48	59	76
30	86	85	53	65	82
32	88	91	55	69	88
34	90	97	61	75	94
36	92	103	66	79	100
38	94	108	71	85	106
40	96	115	73	89	112
42	98	117	78	95	120
44	100	124	84	99	127
46	102		89	105	
48	104		91	111	
50	106		96	115	
52	110		101	116	
54	112		103	117	
56	114		107	123	
58	116		113	125	
60	118		116	127	
62			117	128	
64			120.5		
			121		
			122		
			123		
			123.5		
			124		
			127		
			127.5		
			3		

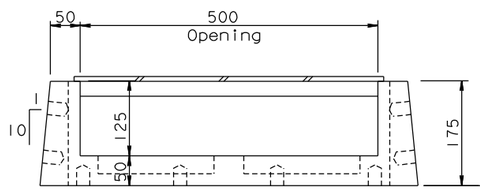

END VIEW A-A

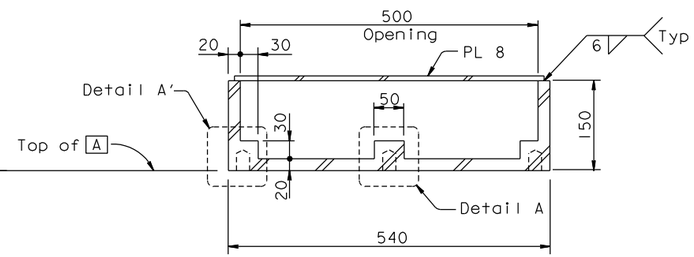

SECTION B-B

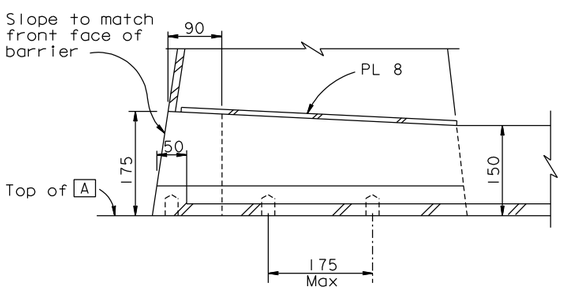

SECTION C-C

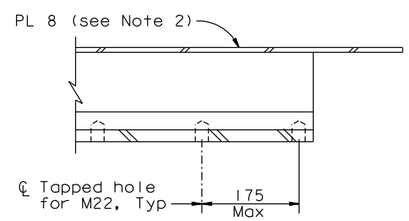

SECTION D-D (Section D'-D' similar)

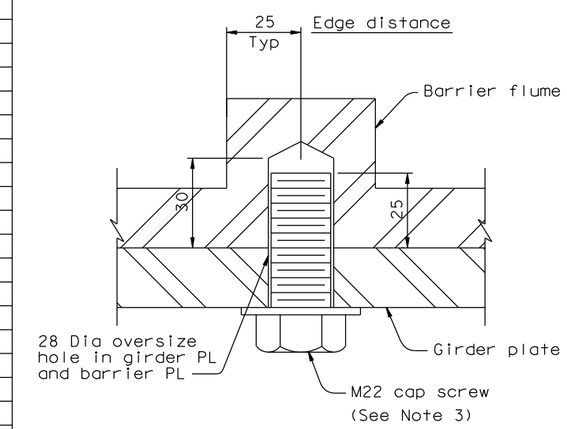

DETAIL A (A' Similar)
1:1

NOTES:

1. Drainage types 1, 2 and 3 are located to the nearest working line indicated. Types 2 and 3 are located east of the panel point unless noted otherwise. Type 1 is located west of panel point.
2. For the extent of PL 8 at Type B Flume, see Section B-B, "Deck Drainage Details No. 2" sheet.
3. Cap screws shall be galvanized A307 bolts and shall be used with a thread locking system.

BARRIER FLUME DETAILS (Drainage Type 2 only)
1:5

REGISTERED PROFESSIONAL ENGINEER Daniel J. Turner No. C 65033 Exp. 06/30/13 CIVIL STATE OF CALIFORNIA

FOR REVISIONS ONLY

CONTRACT CHANGE ORDER NO. _____
SHEET ____ OF ____

REQUESTS FOR INFORMATION NOT ADDRESSED IN THIS CCO REMAIN IN FORCE

MARK	DATE	DESCRIPTIONS	BY	CH'D	CCO#
3	09/01/11	EAST END OBG	DT	GB	87
2	06/13/08	BARRIER MODIFICATIONS	GB	DT	44
1	08/24/07	BARRIER MODIFICATIONS	GB	DT	44

REVISIONS

R. Valizadeh/V. Toan/Y.L./W.L./F.C.
DESIGN OVERSIGHT
SIGN OFF DATE 09/01/11

Rev. Date: 5-18-98

	BY	CHECKED
DESIGN	G. Baker	T. Ho
DETAILS	D. Turner	T. Ho
QUANTITIES	G. Baker	D. Harrison

PREPARED FOR THE STATE OF CALIFORNIA DEPARTMENT OF TRANSPORTATION

ALL DIMENSIONS ARE IN MILLIMETERS UNLESS OTHERWISE SHOWN

ORIGINAL SCALE IN MILLIMETERS FOR REDUCED PLANS 0 10 20 30 40 50 60 70 80 90 100

R. Manzanarez
PROJECT ENGINEER

BRIDGE NO. 34-0006L/R
KILOMETER POST 13.2/13.9

SAN FRANCISCO OAKLAND BAY BRIDGE
EAST SPAN SEISMIC SAFETY PROJECT
SELF-ANCHORED SUSPENSION BRIDGE
(SUPERSTRUCTURE & TOWER)

DECK DRAINAGE DETAIL NO. 3

CU 04
EA 0120F1

DISREGARD PRINTS BEARING EARLIER REVISION DATES

REVISION DATES (PRELIMINARY STAGE ONLY) 05/15/99 08/02/99 05/31/01 04/08/02 07/01/02 12/19/02

SHEET 461R3 OF

FILE => I:\bb\04-012001\sas\contract plans and cco\cco\cco#87\1-original 09-01-11\dgn\akdkd03.dgn

USERNAME => ALIshansk DATE PLOTTED => 30 AUG 2011 TIME PLOTTED => 14:41:57

100 % PS&E