DIST.	COUNTY	ROUTE	KILOMETER POST TOTAL PROJECT	SHEET NO.	TOTAL SHEETS
04	SF	80	13.2/13.9	806R1	1204

Caltrans Metric

George Baker
REGISTERED ENGINEER - CIVIL
12-6-04
PLANS APPROVAL DATE

REGISTERED PROFESSIONAL ENGINEER George S. Baker No. C57112 Exp. 12/31/05 CIVIL STATE OF CALIFORNIA

The State of California or its officers or agents shall not be responsible for the accuracy or completeness of electronic copies of this plan sheet.

T.Y. LIN / MOFFATT & NICHOL
825 BATTERY STREET
SAN FRANCISCO, CA 94111

Caltrans now has a web site! To get to the web site, go to: http://www.dot.ca.gov

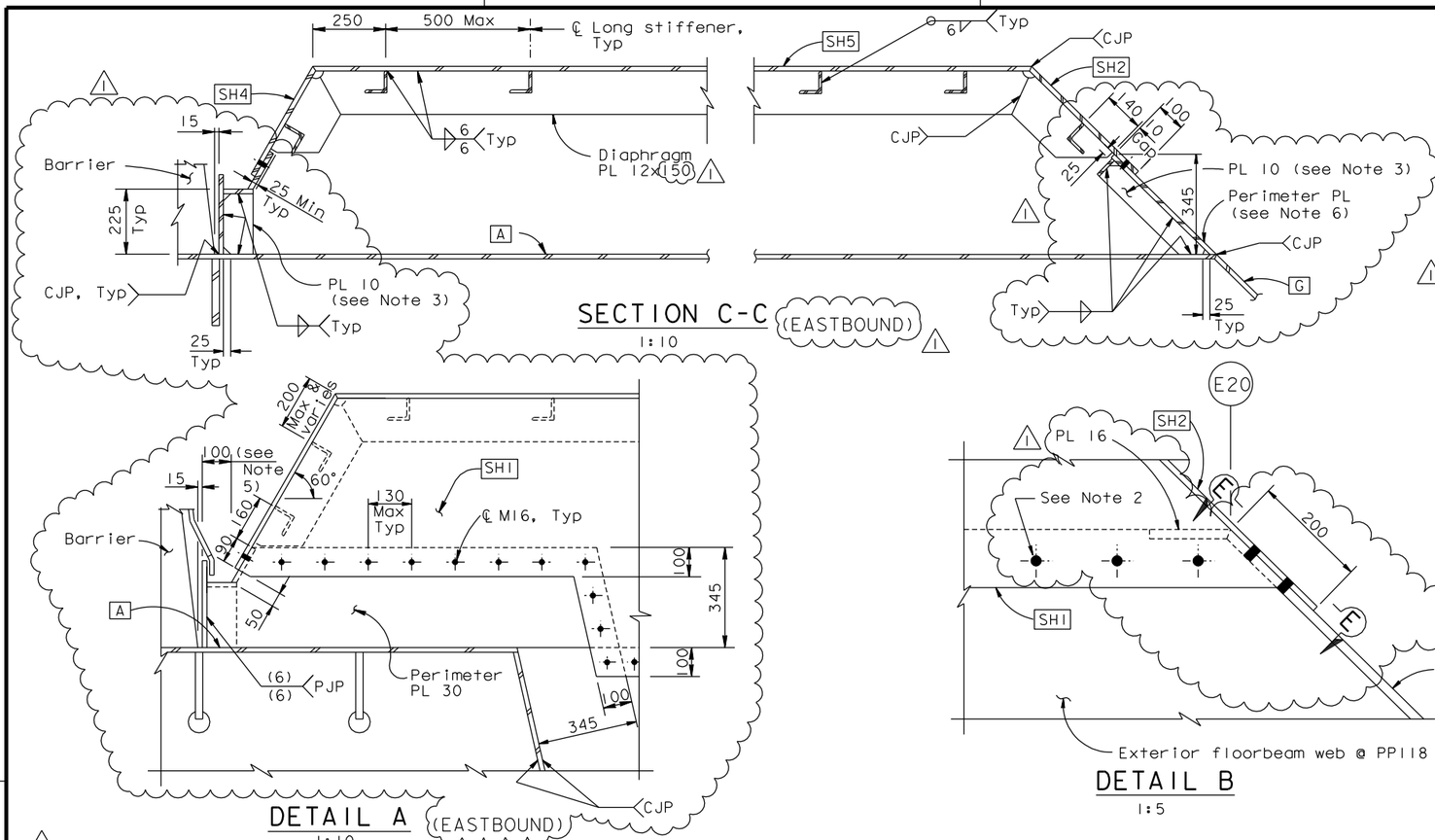

SECTION C-C (EASTBOUND)
1:10

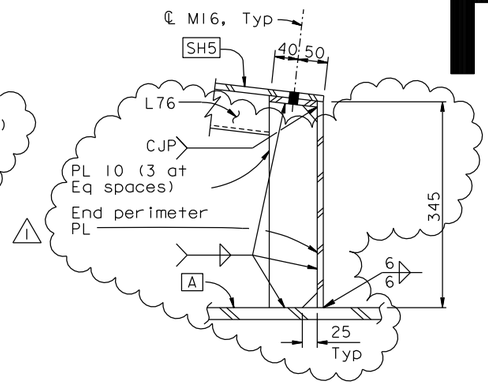

SECTION D-D
1:5

DETAIL A (EASTBOUND)
1:10

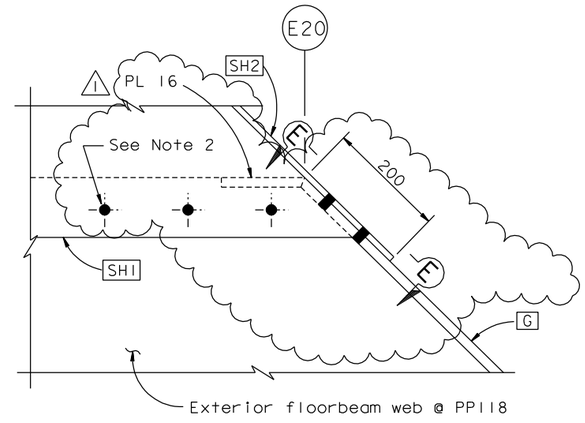

DETAIL B
1:5

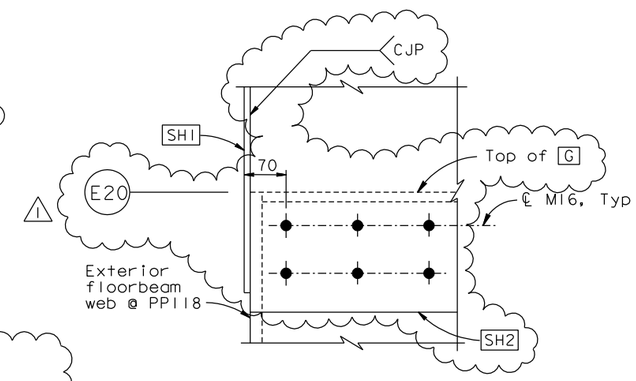

VIEW E-E
1:5

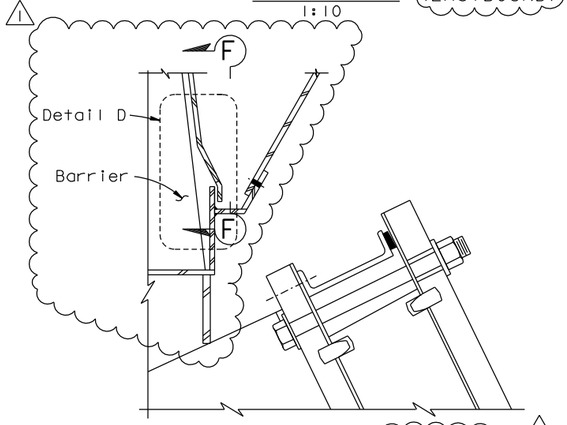

DETAIL C (EASTBOUND)
1:10

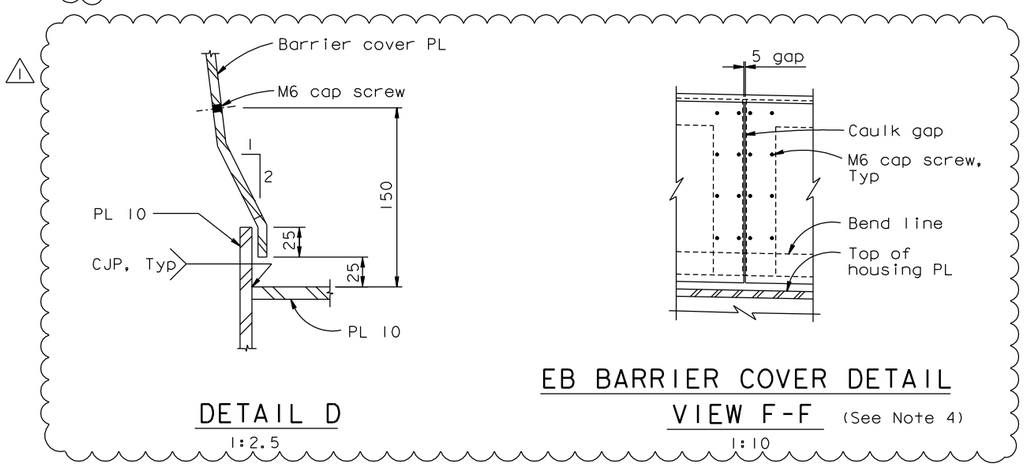

DETAIL D
1:2.5

EB BARRIER COVER DETAIL
VIEW F-F (See Note 4)
1:10

NOTES:

1. All horizontal dimensions are taken parallel to Girder face A.
2. At the Contractor's option, oversized holes may be used for M16 bolts in housing and web PL.
3. Spacing of PL 10 to match spacing of PL 12 diaphragm.
4. For other barrier details not shown, see "Barrier Details" sheets.
5. The housing perimeter PL is fabricated straight. Dimension is 100 from PP118 to PP119 and thereafter varies.
6. At the segment splice, upstation from PP120, the saddle housing perimeter PL shall be cut to fit the deck contour. The top edge of the perimeter PL shall be straight and level with respect to the saddle housing.

REGISTERED PROFESSIONAL ENGINEER Marwan N. Nader No. C 054426 Exp. 12/31/11 CIVIL STATE OF CALIFORNIA

FOR REVISIONS ONLY

CONTRACT CHANGE ORDER NO. _____
SHEET ___ OF ___

REQUESTS FOR INFORMATION NOT ADDRESSED IN THIS CCO REMAIN IN FORCE

ALL DIMENSIONS ARE IN MILLIMETERS UNLESS OTHERWISE SHOWN

R. Valizadeh/V. Toan/Y.L./W.L./F.C.
DESIGN OVERSIGHT
Roya Valizadeh / Vong Toan / Y Liu
SIGN OFF DATE 09/01/11

MARK	DATE	DESCRIPTIONS	BY	CH'D	CCO#
1	09/01/11	EAST END OBG	GB	MN	87

REVISIONS

DESIGN	BY G. Baker	CHECKED T. McMeans	
DETAILS	BY C. Mauch	CHECKED T. McMeans	
QUANTITIES	BY C. Mauch	CHECKED D. Harrison	

PREPARED FOR THE STATE OF CALIFORNIA DEPARTMENT OF TRANSPORTATION

R. Manzanarez
PROJECT ENGINEER

BRIDGE NO. 34-0006L/R
KILOMETER POST 13.2/13.9

SAN FRANCISCO OAKLAND BAY BRIDGE
EAST SPAN SEISMIC SAFETY PROJECT
SELF-ANCHORED SUSPENSION BRIDGE
(SUPERSTRUCTURE & TOWER)

EAST SADDLE HOUSING DETAILS NO. 2

Rev. Date: 5-18-98

ORIGINAL SCALE IN MILLIMETERS FOR REDUCED PLANS 0 10 20 30 40 50 60 70 80 90 100

CU 04
EA 0120F1

DISREGARD PRINTS BEARING EARLIER REVISION DATES

REVISION DATES (PRELIMINARY STAGE ONLY) 05/18/99 08/02/99 05/31/01 04/08/02 07/01/02 12/19/02

SHEET 389R1 OF

FILE => I:\bb\04-012001\sas\contract plans and cco\cco\cco*87\1-original 09-01-11\dgn\agshd06.dgn

USERNAME => ALishansky DATE PLOTTED => 30 AUG 2011 TIME PLOTTED => 14:02:58

100 % PS&E