DIST.	COUNTY	ROUTE	KILOMETER POST TOTAL PROJECT	SHEET NO.	TOTAL SHEETS
04	SF	80	13.2/13.9	733S2	1204

REGISTERED ENGINEER - CIVIL

04-18-12
PLANS APPROVAL DATE

REGISTERED PROFESSIONAL ENGINEER Marwan N. Nader No. C 054426 Exp. 12/31/13 CIVIL STATE OF CALIFORNIA

The State of California or its officers or agents shall not be responsible for the accuracy or completeness of electronic copies of this plan sheet.

T.Y. LIN / MOFFATT & NICHOL
825 BATTERY STREET
SAN FRANCISCO, CA 94111

Caltrans now has a web site! To get to the web site, go to: http://www.dot.ca.gov

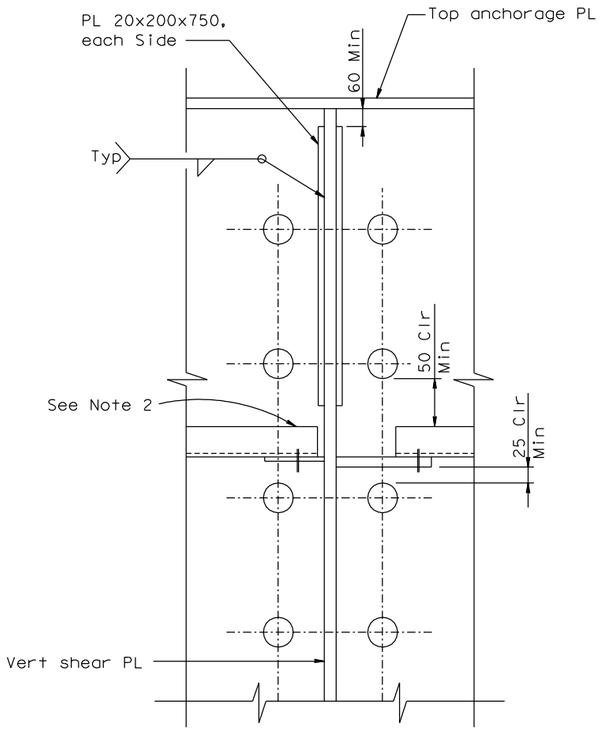

TYPE 1

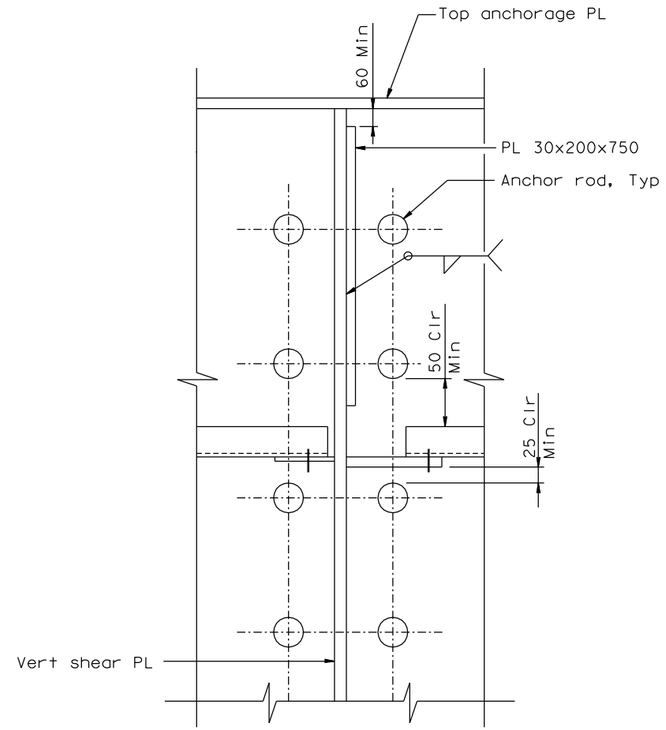

TYPE 2

VIEW H-H (See Note 1)
1:10

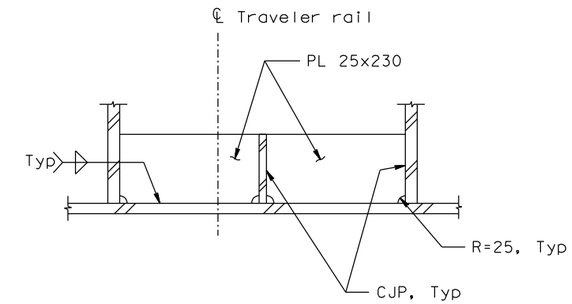

DETAIL E (Detail E' opposite hand)
1:10

NOTES:

1. Use Type 1 layout at all vertical shear PL except for the two southernmost shear plates on the E-Line where Type 2 shall be used.

2. Trim angle as required to clear strand.

CONTRACT CHANGE ORDER NO. _____
SHEET ____ OF ____

REQUESTS FOR INFORMATION NOT ADDRESSED IN THIS CCO REMAIN IN FORCE

ALL DIMENSIONS ARE IN MILLIMETERS UNLESS OTHERWISE SHOWN

R. Valizadeh/V. Toan/Y.L./W.L./F.C.
DESIGN OVERSIGHT
SIGN OFF DATE 04/18/12

MARK	DATE	DESCRIPTIONS	BY	CH'D	CCO#
0	04/18/12	EAST END OBG	MN	GB	87

REVISIONS

DESIGN	BY G. Baker	CHECKED M. Nader	
DETAILS	BY G. Baker	CHECKED D. Turner	
QUANTITIES	BY G. Baker	CHECKED D. Turner	

PREPARED FOR THE STATE OF CALIFORNIA DEPARTMENT OF TRANSPORTATION

R. Manzanarez
PROJECT ENGINEER

BRIDGE NO. 34-0006L/R
KILOMETER POST 13.2/13.9

SAN FRANCISCO OAKLAND BAY BRIDGE
EAST SPAN SEISMIC SAFETY PROJECT
SELF-ANCHORED SUSPENSION BRIDGE
(SUPERSTRUCTURE & TOWER)

EAST CABLE ANCHORAGE "E" LINE LAYOUT NO. 3B

Rev. Date: 5-18-98

ORIGINAL SCALE IN MILLIMETERS FOR REDUCED PLANS 0 10 20 30 40 50 60 70 80 90 100

CU 04
EA 0120F1

DISREGARD PRINTS BEARING EARLIER REVISION DATES 04/18/12

REVISION DATES (PRELIMINARY STAGE ONLY)

SHEET 316S2 OF

FILE => I:\bb\04-012001\sas\contract plans and cco\cco\cco#87\temp\agan106b.dgn

100% PS&E

USERNAME => DWinrow DATE PLOTTED => 18 APR 2012 TIME PLOTTED => 11:27:10