DIST.	COUNTY	ROUTE	KILOMETER POST TOTAL PROJECT	SHEET NO.	TOTAL SHEETS
04	SF	80	13.2/13.9	732S1	1204

REGISTERED ENGINEER - CIVIL

04-18-12

PLANS APPROVAL DATE

REGISTERED PROFESSIONAL ENGINEER Marwan N. Nader No. C 054426 Exp. 12/31/13 CIVIL STATE OF CALIFORNIA

The State of California or its officers or agents shall not be responsible for the accuracy or completeness of electronic copies of this plan sheet.

T.Y. LIN / MOFFATT & NICHOL
825 BATTERY STREET
SAN FRANCISCO, CA 94111

Caltrans now has a web site! To get to the web site, go to: http://www.dot.ca.gov

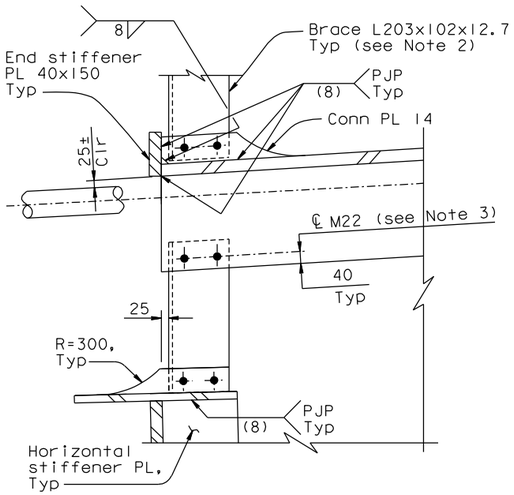

ALTERNATIVE DETAIL B

1:10

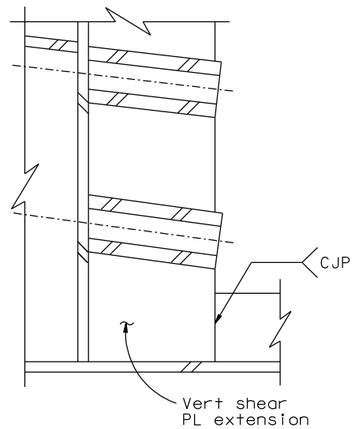

VIEW J-J Shown (View J'-J' Similar)

1:10

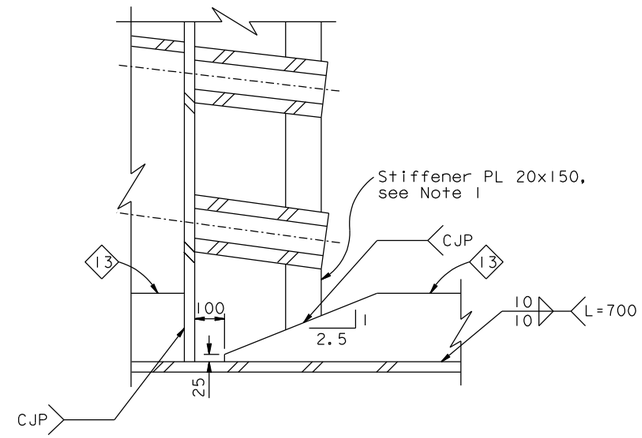

VIEW K-K Shown (View K'-K' Similar)

1:10

NOTES:

1. Bottom stiffener PL 20x150 shall align with stiffener type 13.
2. At the Contractor's option, PL 25x200 may be used in lieu of the L203x102x12.7.
3. At the Contractor's option, bolts may be moved to 50 mm from the face of the vertical shear PL, and the L203 or PL 25 extended, to provide additional clearance from the strands, subject to the review and approval of the Engineer.

100% PS&E

TIME PLOTTED => 11:26:21
DATE PLOTTED => 18 APR 2012
USERNAME => DWinrow

CONTRACT CHANGE ORDER NO. ____
SHEET ___ OF ___

REQUESTS FOR INFORMATION NOT ADDRESSED IN THIS CCO REMAIN IN FORCE

ALL DIMENSIONS ARE IN MILLIMETERS UNLESS OTHERWISE SHOWN

R. Valizadeh/V. Toan/Y.L./W.L./F.C.
DESIGN OVERSIGHT
Reza Valizadeh / Vong Toan / Y Liu
SIGN OFF DATE 04/18/12

MARK	DATE	DESCRIPTIONS	BY	CH'D	CCO#
0	04/18/12	EAST END OBG	MN	GB	87

REVISIONS

DESIGN	BY G. Baker	CHECKED M. Nader	
DETAILS	BY G. Baker	CHECKED D. Turner	
QUANTITIES	BY G. Baker	CHECKED D. Turner	

PREPARED FOR THE STATE OF CALIFORNIA DEPARTMENT OF TRANSPORTATION

R. Manzanarez
PROJECT ENGINEER

BRIDGE NO. 34-0006L/R
KILOMETER POST 13.2/13.9

SAN FRANCISCO OAKLAND BAY BRIDGE
EAST SPAN SEISMIC SAFETY PROJECT
SELF-ANCHORED SUSPENSION BRIDGE
(SUPERSTRUCTURE & TOWER)

EAST CABLE ANCHORAGE "E" LINE LAYOUT NO. 2A

Rev. Date: 5-18-98

ORIGINAL SCALE IN MILLIMETERS FOR REDUCED PLANS 0 10 20 30 40 50 60 70 80 90 100

CU 04
EA 0120F1

DISREGARD PRINTS BEARING EARLIER REVISION DATES

REVISION DATES (PRELIMINARY STAGE ONLY) 04/18/12

SHEET 315S1 OF

FILE => I:\bb\04-012001\sas\contract plans and cco\cco\cco#87\temp\agan105s1.dgn