DIST.	COUNTY	ROUTE	KILOMETER POST TOTAL PROJECT	SHEET NO.	TOTAL SHEETS
04	SF	80	13.2/13.9	725R2	1204

George Baker
REGISTERED ENGINEER - CIVIL
12-6-04
PLANS APPROVAL DATE

REGISTERED PROFESSIONAL ENGINEER George S. Baker No. C 57112 Exp. 12/31/05 CIVIL STATE OF CALIFORNIA

The State of California or its officers or agents shall not be responsible for the accuracy or completeness of electronic copies of this plan sheet.

T.Y. LIN / MOFFATT & NICHOL
825 BATTERY STREET
SAN FRANCISCO, CA 94111

Caltrans now has a web site! To get to the web site, go to: http://www.dot.ca.gov

Caltrans Metric

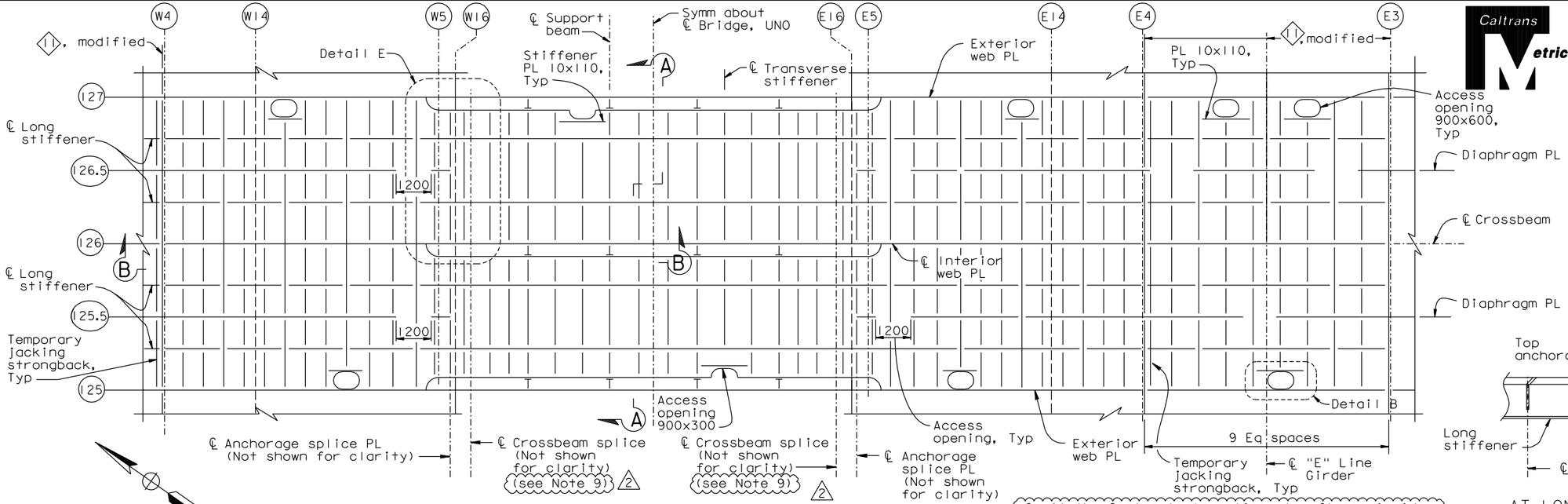

CROSSBEAM PLAN AT TOP ANCHORAGE PLATE LEVEL 2

1:80

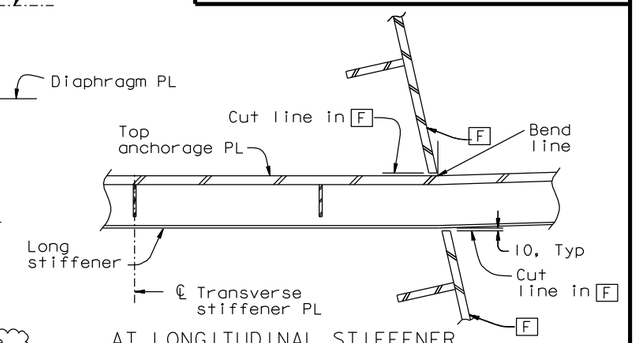

AT LONGITUDINAL STIFFENER

9. At the Contractor's option, top flange inside splice plates may be chamfered by 4 mm at the top corner to provide additional clearance from top flange stiffener welds, subject to review and approval of the Engineer.
10. At the Contractor's option, the web splice may be detailed such that bolt edge distances are 1.25d minimum, subject to review and approval of the Engineer.

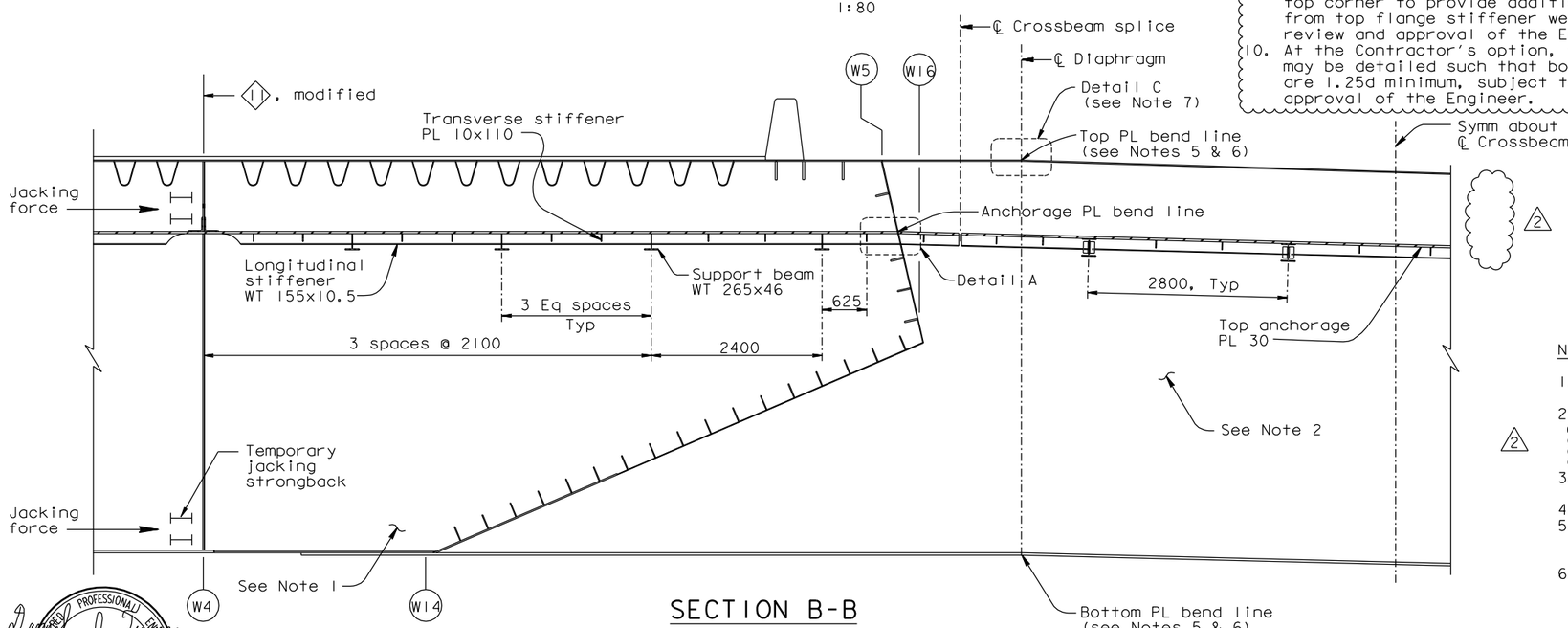

SECTION B-B

1:40

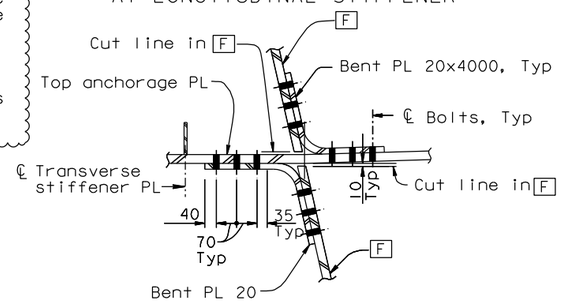

BETWEEN LONGITUDINAL STIFFENERS

DETAIL A (See Note 8) 2

1:10

NOTES:

1. For girder details not shown, see "Girder At East Transition" and "Floorbeam At East Transition" sheets.
2. For crossbeam details not shown, see "Crossbeam At Pier E2" sheets. 2 At the Contractor's option, PL 22x200 plate stiffeners at the east anchorage crossbeam webs may be used in lieu of PL 22x205 plate stiffeners, subject to review and approval of the Engineer.
3. For Section A-A and Detail E, see "Crossbeam At East Anchorage No.3" sheet.
4. For Detail B, see "Crossbeam At East Anchorage No.4" sheet.
5. The location of the angular changes to the top and bottom skin plates due to the roadway geometry shall be at the first diaphragm inside the crossbeam field splice, towards the centerline of the bridge.
6. Stiffeners at the angle change, running longitudinal to the crossbeam, shall be interrupted and welded to the diaphragm with a CJP weld. Stiffeners on opposite faces of the diaphragm shall be aligned within the tolerances specified for stiffener splices.
7. For Detail C, see similar Section B-B on "Typical Crossbeam Details No.4" sheet.
8. 2 For alternate Detail A, see "Crossbeam At East Anchorage No.3" sheet.

Daniel J. Turner
REGISTERED PROFESSIONAL ENGINEER Daniel J. Turner No. C 65033 Exp. 06/30/13 CIVIL STATE OF CALIFORNIA

FOR REVISIONS ONLY

CONTRACT CHANGE ORDER NO. ____
SHEET ___ OF ___

REQUESTS FOR INFORMATION NOT ADDRESSED IN THIS CCO REMAIN IN FORCE

ALL DIMENSIONS ARE IN MILLIMETERS UNLESS OTHERWISE SHOWN

R. Valizadeh/V. Toan/Y.L./W.L./F.C.
DESIGN OVERSIGHT
Roya Valizadeh / Vong Toan / Y. Liu
SIGN OFF DATE 09/01/11

MARK	DATE	DESCRIPTIONS	BY	CH'D	CCO#
2	09/01/11	EAST END OBG	DT	GB	87
1	04/02/07	CROSSBEAM KINK	GB	DT	38

REVISIONS

DESIGN	BY G. Baker	CHECKED P. Ritchie	
DETAILS	BY D. Veytsman	CHECKED T. McMeans	
QUANTITIES	BY C. Mauch	CHECKED M. Roberts	

PREPARED FOR THE STATE OF CALIFORNIA DEPARTMENT OF TRANSPORTATION

R. Manzanarez
PROJECT ENGINEER

BRIDGE NO. 34-0006L/R
KILOMETER POST 13.2/13.9

SAN FRANCISCO OAKLAND BAY BRIDGE
EAST SPAN SEISMIC SAFETY PROJECT
SELF-ANCHORED SUSPENSION BRIDGE
(SUPERSTRUCTURE & TOWER)

CROSSBEAM AT EAST ANCHORAGE NO. 2

Rev. Date: 5-18-98

ORIGINAL SCALE IN MILLIMETERS FOR REDUCED PLANS 0 10 20 30 40 50 60 70 80 90 100

CU 04
EA 0120F1

DISREGARD PRINTS BEARING EARLIER REVISION DATES

REVISION DATES (PRELIMINARY STAGE ONLY) 05/15/99 08/02/99 05/31/01 04/08/02 01/04/02 12/19/02

SHEET 308R2 OF

FILE => I:\bb\04-012001\sas\contract plans and cco\cco\cco#87\1-original 09-01-11\dgn\agcrs11.dgn

USERNAME => PTom DATE PLOTTED => 30 AUG 2011 TIME PLOTTED => 10:24:23

100% PS&E