DIST.	COUNTY	ROUTE	KILOMETER POST TOTAL PROJECT	SHEET NO.	TOTAL SHEETS
04	SF	80	13.2/13.9	716R1	1204

Caltrans Metric

George Baker
REGISTERED ENGINEER - CIVIL
12-6-04
PLANS APPROVAL DATE

REGISTERED PROFESSIONAL ENGINEER George S. Baker No. C57112 Exp. 12/31/05 CIVIL STATE OF CALIFORNIA

The State of California or its officers or agents shall not be responsible for the accuracy or completeness of electronic copies of this plan sheet.

T.Y. LIN / MOFFATT & NICHOL
825 BATTERY STREET
SAN FRANCISCO, CA 94111

Caltrans now has a web site! To get to the web site, go to: http://www.dot.ca.gov

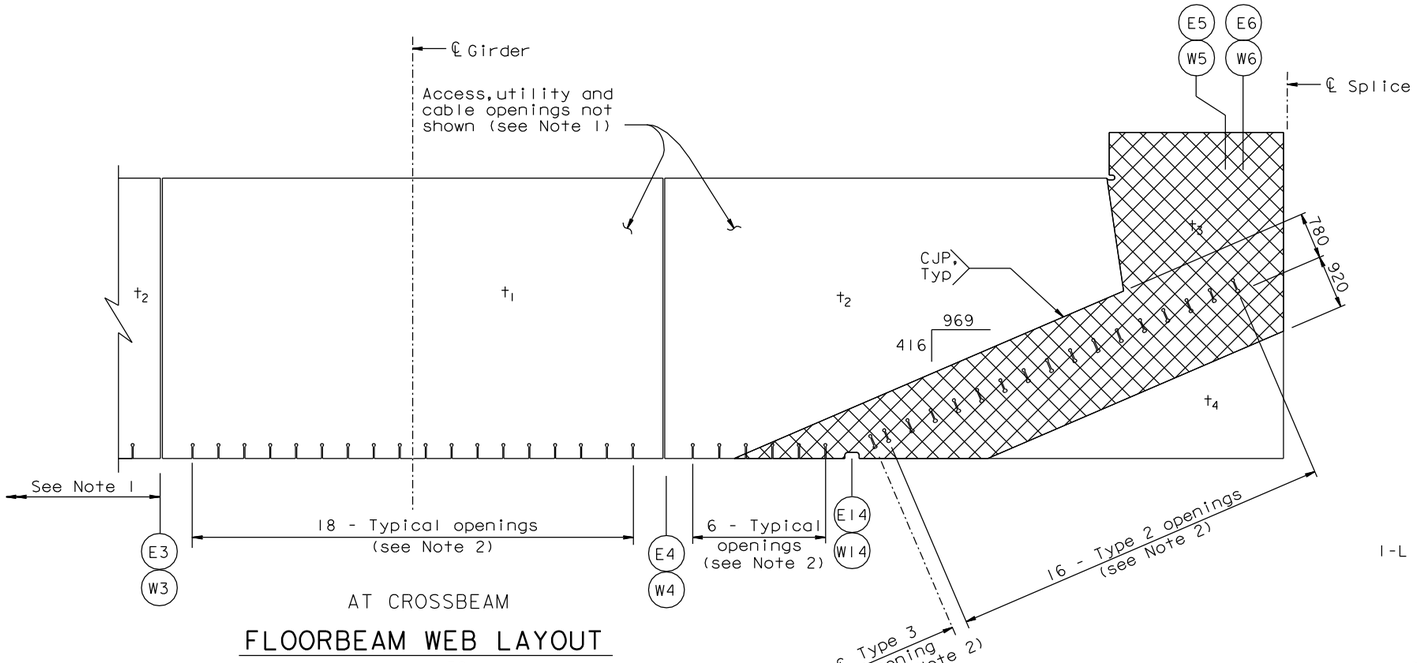

AT CROSSBEAM

FLOORBEAM WEB LAYOUT

1:50

FLOORBEAM WEB THICKNESS TABLE				
PP	t_1	t_2	t_3	t_4
118	18	18	22	18
120	20	20	25	20
125	20	20	25	20
126	30	20	25	20
127	25	18	22	18

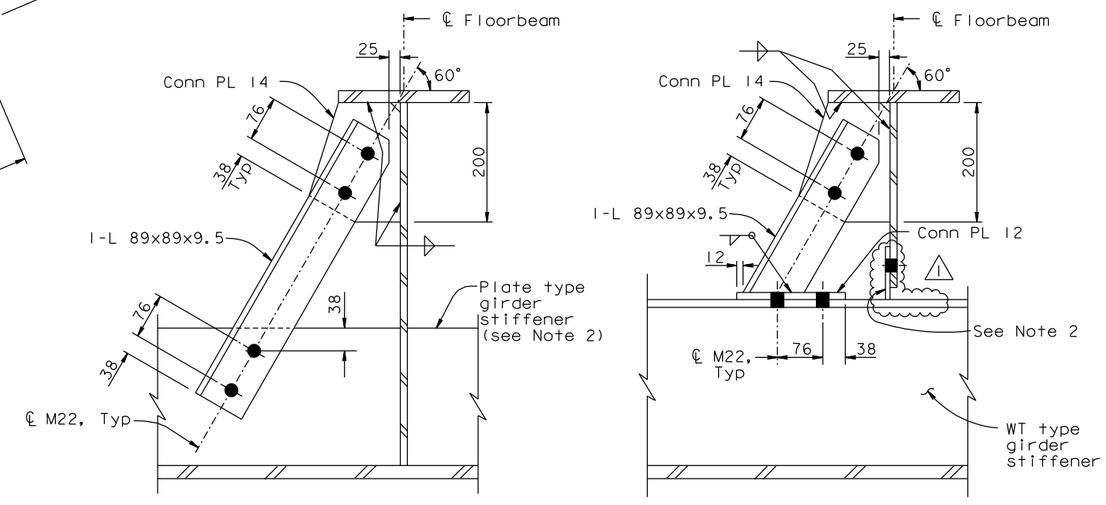

PLATE TYPE STIFFENER

WT TYPE STIFFENER

FLANGE BRACE DETAIL

1:5

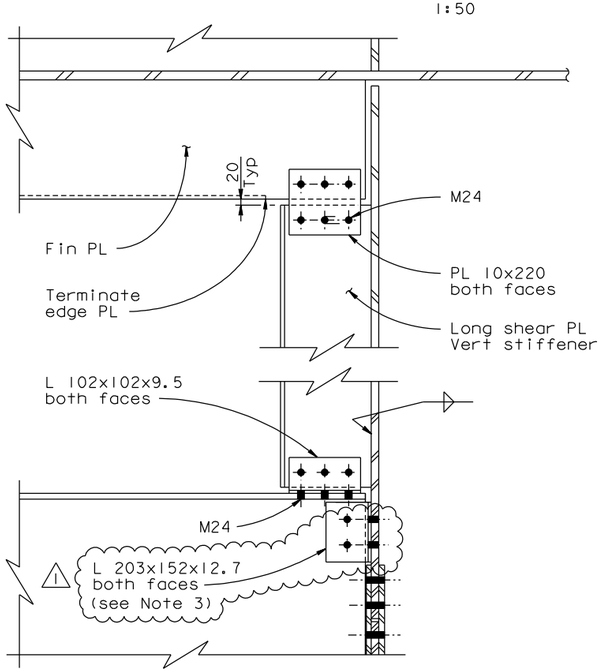

DETAIL F

1:10

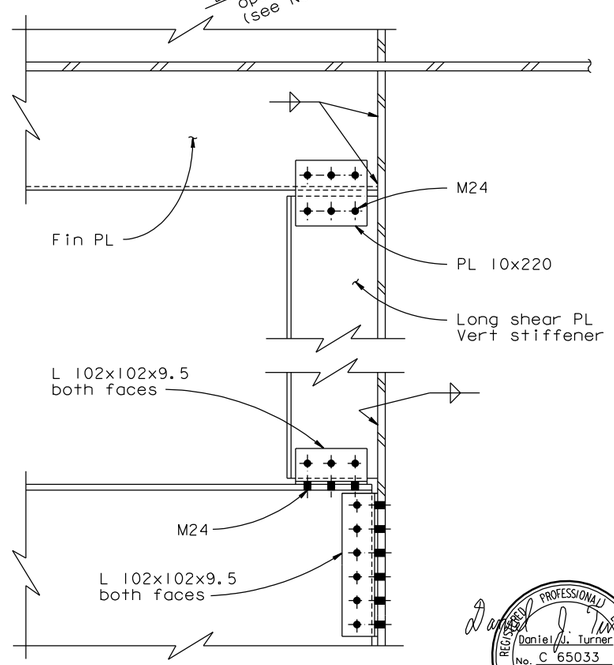

DETAIL E

1:10

LEGEND:

"Indicates SPCM & TTP, web PL"

NOTES:

1. For locations of openings and details of floorbeams not shown, see "Floorbeam At East Transition" sheets.
2. For details of girder stiffener opening at floorbeams, see "Typical Girder Details No. 6" sheet.
3. At the Contractor's option, ASTM A992 or ASTM A572 Gr 345 may be used in lieu of ASTM A709 for the L 203x152x12.7.

CONTRACT CHANGE ORDER NO. ____
SHEET ___ OF ___

REQUESTS FOR INFORMATION NOT ADDRESSED IN THIS CCO REMAIN IN FORCE

REGISTERED PROFESSIONAL ENGINEER Daniel J. Turner No. C 65033 Exp. 06/30/13 CIVIL STATE OF CALIFORNIA

FOR REVISIONS ONLY

ALL DIMENSIONS ARE IN MILLIMETERS UNLESS OTHERWISE SHOWN

100 % PS&E

R. Valizadeh/V. Toan/Y.L./W.L./F.C.
DESIGN OVERSIGHT
Roya Valizadeh / Vong Toan / Y Liu
SIGN OFF DATE 09/01/11

MARK	DATE	DESCRIPTIONS	BY	CH'D	CCO#
1	09/01/11	EAST END OBG	DT	GB	87

REVISIONS

DESIGN	BY G. Baker	CHECKED	P. Ritchie
DETAILS	BY M. Gulyas	CHECKED	T. McMeans
QUANTITIES	BY C. Mauch	CHECKED	M. Roberts

PREPARED FOR THE STATE OF CALIFORNIA DEPARTMENT OF TRANSPORTATION

R. Manzanarez
PROJECT ENGINEER

BRIDGE NO. 34-0006L/R
KILOMETER POST 13.2/13.9

SAN FRANCISCO OAKLAND BAY BRIDGE
EAST SPAN SEISMIC SAFETY PROJECT
SELF-ANCHORED SUSPENSION BRIDGE
(SUPERSTRUCTURE & TOWER)

FLOORBEAM AT EAST TRANSITION DETAILS NO. 2

Rev. Date: 5-18-98

ORIGINAL SCALE IN MILLIMETERS FOR REDUCED PLANS 0 10 20 30 40 50 60 70 80 90 100

CU 04
EA 0120F1

DISREGARD PRINTS BEARING EARLIER REVISION DATES

REVISION DATES (PRELIMINARY STAGE ONLY) 08/02/99 05/31/01 04/08/02 07/01/02 12/19/02

SHEET 299R1 OF

FILE => I:\bb\04-012001\sas\contract plans and cco\cco\cco*87\1-original 09-01-11\dgn\agefd14.dgn

USERNAME => ALishansky DATE PLOTTED => 30 AUG 2011 TIME PLOTTED => 09:56:11