DIST.	COUNTY	ROUTE	KILOMETER POST TOTAL PROJECT	SHEET NO.	TOTAL SHEETS
04	SF	80	13.2/13.9	715R1	1204

Caltrans Metric

George Baker
REGISTERED ENGINEER - CIVIL
12-6-04
PLANS APPROVAL DATE

REGISTERED PROFESSIONAL ENGINEER George S. Baker No. C57112 Exp. 12/31/05 CIVIL STATE OF CALIFORNIA

The State of California or its officers or agents shall not be responsible for the accuracy or completeness of electronic copies of this plan sheet.

T.Y. LIN / MOFFATT & NICHOL
825 BATTERY STREET
SAN FRANCISCO, CA 94111

Caltrans now has a web site! To get to the web site, go to: http://www.dot.ca.gov

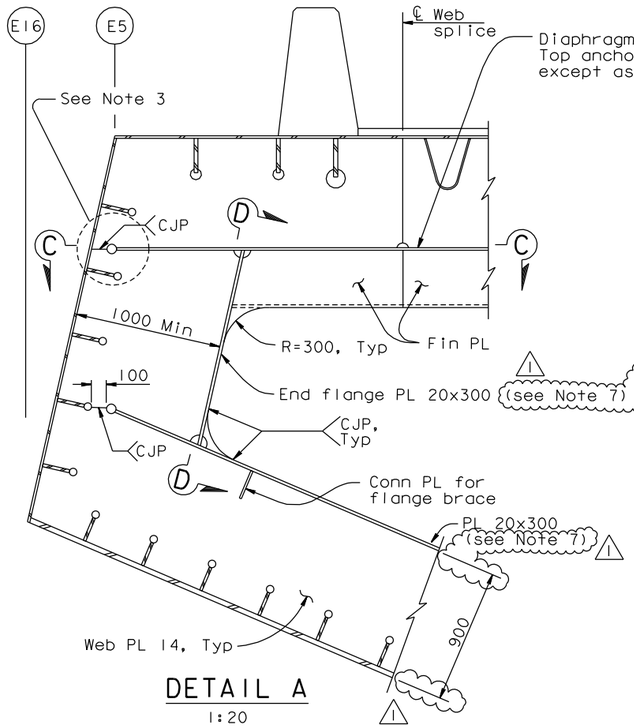

DETAIL A
1:20

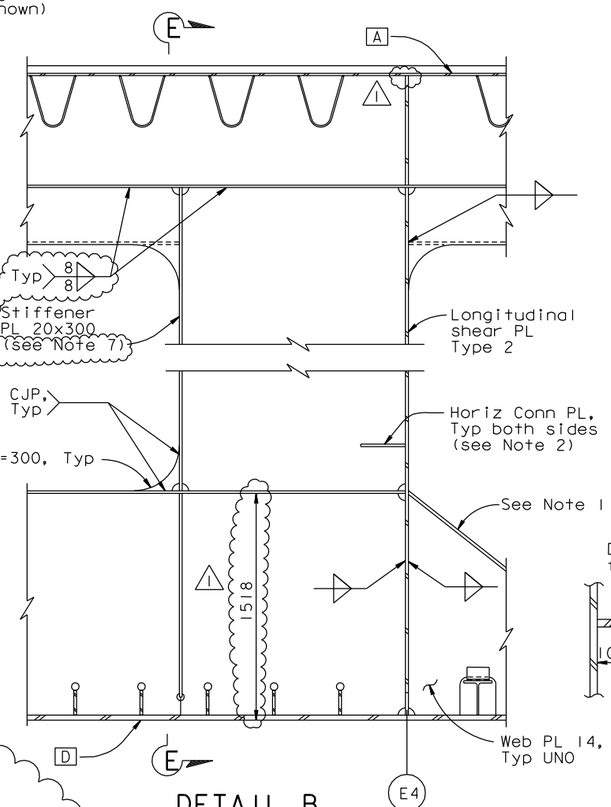

DETAIL B
1:20

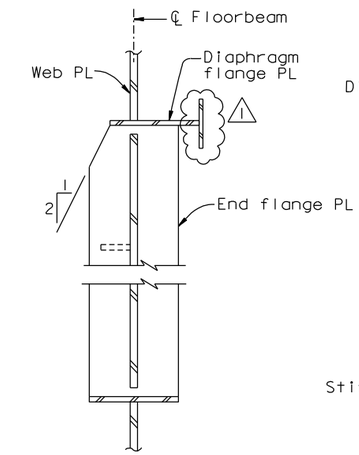

SECTION D-D
1:10

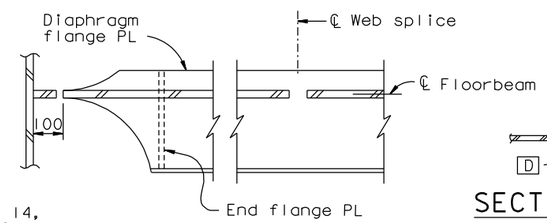

SECTION C-C
1:10

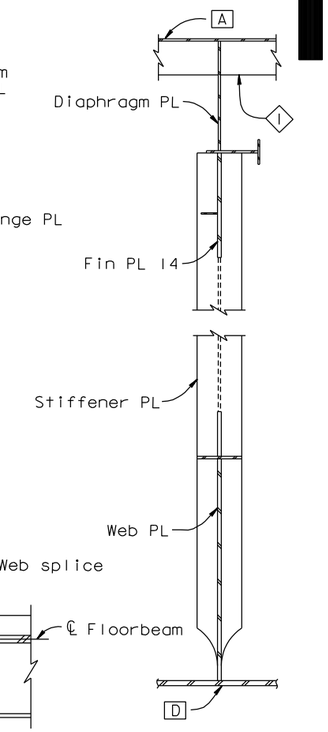

SECTION E-E
1:20

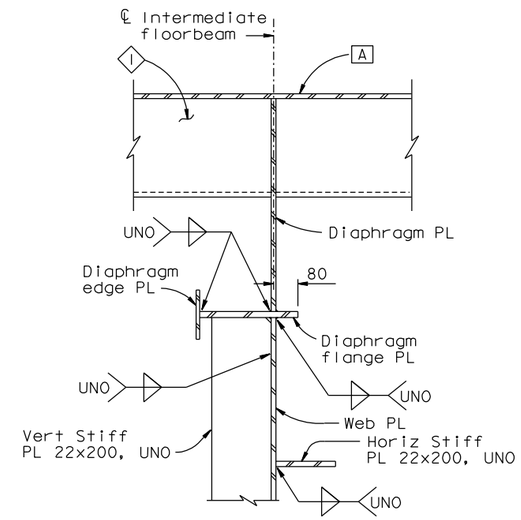

SECTION B-B
1:10

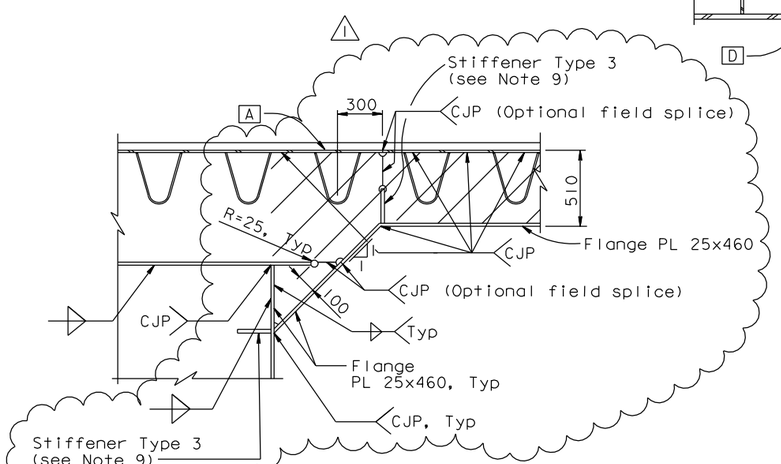

DETAIL C
1:20

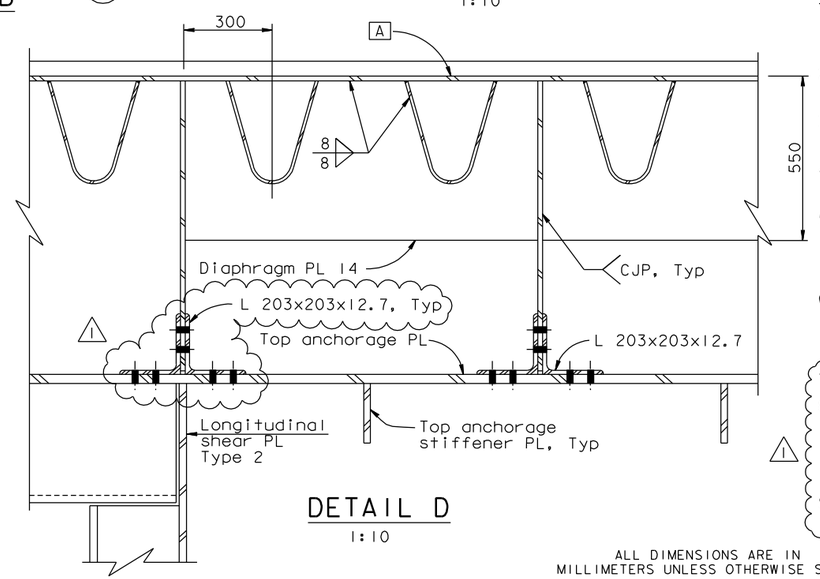

DETAIL D
1:10

NOTES:

1. For details not shown, see "Typical Floorbeam Details" sheets.
2. For horizontal connection PL detail at longitudinal shear PL, see "Typical Girder Details No.9" sheet.
3. For details of top anchorage PL through girder at crossbeam, see "Crossbeam At East Anchorage" sheets.
4. For details of stiffener Type 1, see "Typical Girder Details No.4" sheet.
5. For "Floorbeam At East Transition Details" sheets, all bolts shall be detailed according to the Bolt Dimension Table. See "Typical Girder Details No.1" sheet. All bolts are HS UNO.
6. For "Floorbeam At East Transition Details" sheets UNO, all fillet welds shall be 6 mm for plate sizes not greater than 20 mm. For plates greater than 20 mm, fillet welds shall be 8 mm UNO.
7. In lieu of PL 20x300, two PL 20x145 may be used.
8. For flanges of cable opening, two PL 25x225 may be used in lieu of PL 25x460. In this case, the CJP flange weld in each flange shall be extended 100 mm and the fillet welds for the lower flanges shall overlap the CJP welds in the extension.
9. For stiffener Type 3, see "Floorbeam At East Transition Details No.3" sheet.

ALL DIMENSIONS ARE IN MILLIMETERS UNLESS OTHERWISE SHOWN

REGISTERED PROFESSIONAL ENGINEER Marwan N. Nader No. C 054426 Exp. 12/31/11 CIVIL STATE OF CALIFORNIA

FOR REVISIONS ONLY

CONTRACT CHANGE ORDER NO. _____
SHEET ___ OF ___

REQUESTS FOR INFORMATION NOT ADDRESSED IN THIS CCO REMAIN IN FORCE

R. Valizadeh/V. Toan/Y.L./W.L./F.C.
DESIGN OVERSIGHT
Roya Valizadeh / Vong Toan / Y Liu
SIGN OFF DATE 09/01/11

MARK	DATE	DESCRIPTIONS	BY	CH'D	CCO#
1	09/01/11	EAST END OBG	GB	MN	87

REVISIONS

	BY	CHECKED
DESIGN	G. Baker	P. Ritchie
DETAILS	M. Gulyas	T. McMeans
QUANTITIES	C. Mauch	M. Roberts

PREPARED FOR THE STATE OF CALIFORNIA DEPARTMENT OF TRANSPORTATION

R. Manzanarez
PROJECT ENGINEER

BRIDGE NO. 34-0006L/R
KILOMETER POST 13.2/13.9

SAN FRANCISCO OAKLAND BAY BRIDGE
EAST SPAN SEISMIC SAFETY PROJECT
SELF-ANCHORED SUSPENSION BRIDGE
(SUPERSTRUCTURE & TOWER)

FLOORBEAM AT EAST TRANSITION DETAILS NO. 1

Rev. Date: 5-18-98

ORIGINAL SCALE IN MILLIMETERS FOR REDUCED PLANS 0 10 20 30 40 50 60 70 80 90 100

CU 04
EA 0120F1

DISREGARD PRINTS BEARING EARLIER REVISION DATES

REVISION DATES (PRELIMINARY STAGE ONLY) 05/15/99 08/02/99 05/31/01 04/08/02 07/01/02 12/19/02 11/13/05

SHEET 298R1 OF

FILE => I:\bb\04-0120I\sas\contract plans and cco\cco\cco*87\1-original 09-01-11\dgn\agefd13.dgn

USERNAME => ALIshansky DATE PLOTTED => 30 AUG 2011 TIME PLOTTED => 09:54:08

100% PS&E