DIST.	COUNTY	ROUTE	KILOMETER POST TOTAL PROJECT	SHEET NO.	TOTAL SHEETS
04	SF	80	13.2/13.9	709R2	1204

George Baker
REGISTERED ENGINEER - CIVIL
12-6-04
PLANS APPROVAL DATE

REGISTERED PROFESSIONAL ENGINEER George S. Baker No. C 57112 Exp. 12/31/05 CIVIL STATE OF CALIFORNIA

The State of California or its officers or agents shall not be responsible for the accuracy or completeness of electronic copies of this plan sheet.

T.Y. LIN / MOFFATT & NICHOL
825 BATTERY STREET
SAN FRANCISCO, CA 94111

Caltrans now has a web site! To get to the web site, go to: http://www.dot.ca.gov

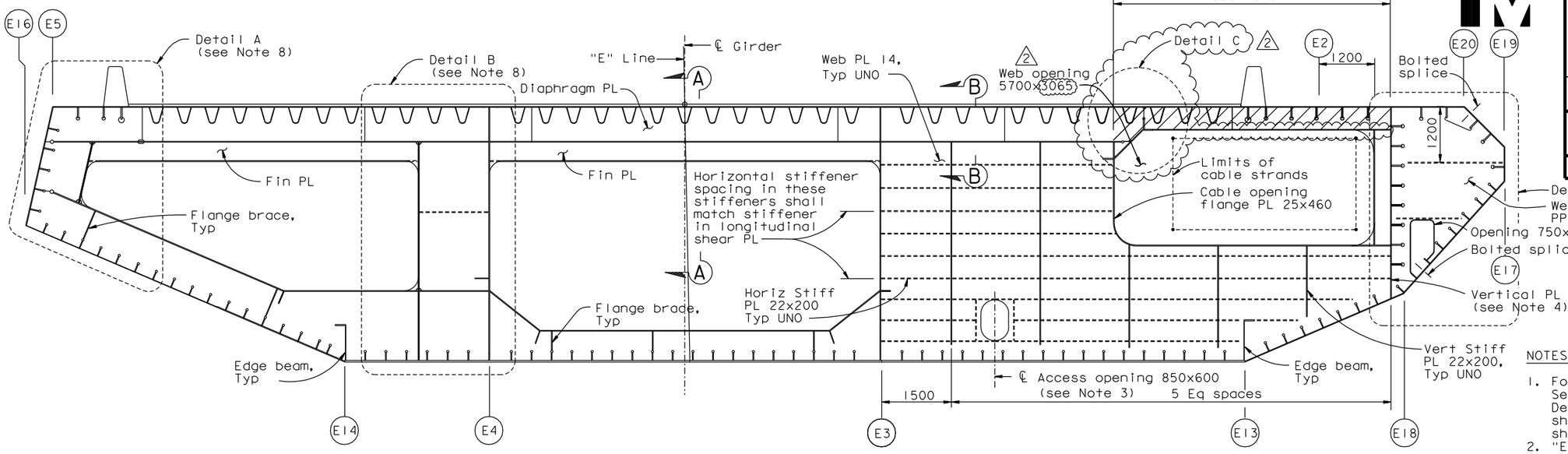

PP 122 (Shown) & PP 122.5 (Similar)

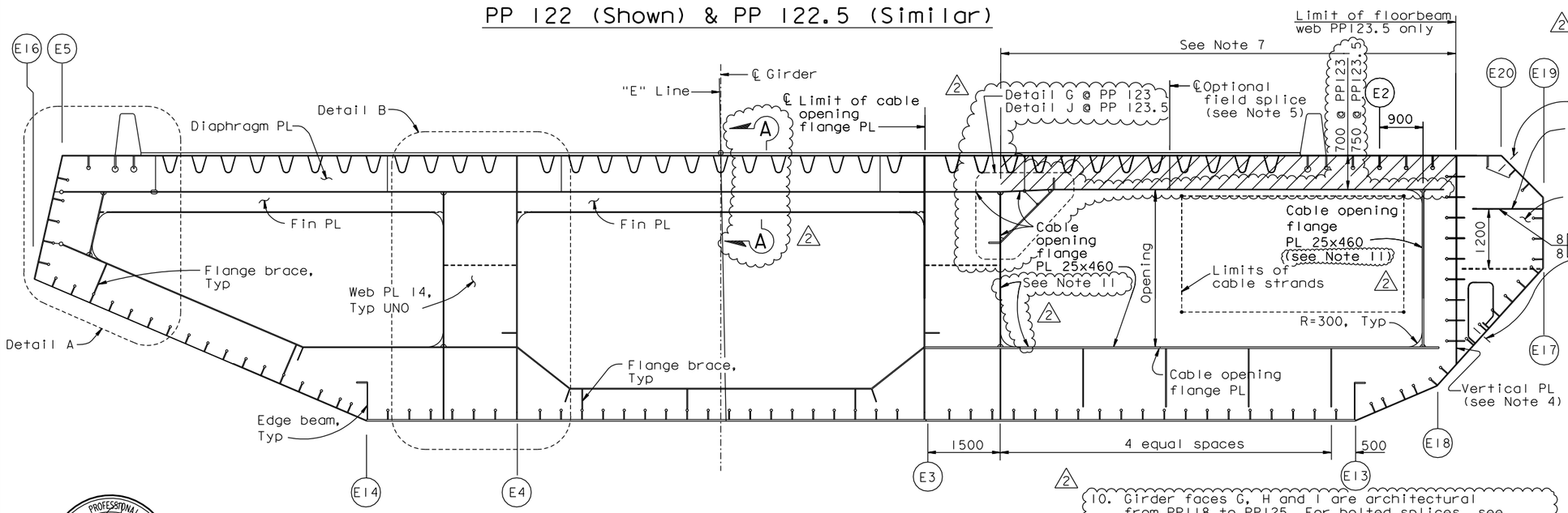

PP 123 (Shown) & PP 123.5 (Similar)

"E" LINE SECTION (See Note 2)
1:50

NOTES:

1. For floorbeam details not shown and Section A-A, see "Typical Floorbeam Details" sheets. For dimensions not shown, see "Girder At East Transition" sheets.
2. "E" Line girder is shown, "W" Line girder is similar.
3. When the access opening edge is within 50 mm of a floorbeam stiffener, the reinforcing flange shall be omitted on the side of that stiffener.
4. For vertical PL details, see "Girder At East Transition Details" sheets.
5. For optional field splice details, see "East Anchorage Construction Details" sheets.
6. Bikepath bearing stiffeners shall be welded to girder PL using PJP with 80% penetration welds. Girder stiffener plates shall be coped on either side of bikepath stiffener. Bikepath stiffeners shall align with the bottom flanges of the bikepath cantilever beams at PP123.
7. Weld of diaphragm PL to girder PL A shall be CJP.
8. For Details A, B and C, and Section B-B, see "Floorbeam At East Transition Details No.1" sheet. For Details G & J, see "Floorbeam at East Transition Details No.3" sheet.
9. For Detail E, see "Girder At East Transition Details No.3" sheet.
10. Girder faces G, H and I are architectural from PP118 to PP125. For bolted splices, see "Girder At East Transition Details No.3" sheet. For splice locations, see "Girder At East Transition Nos.11 to 14" sheets.
11. At the Contractor's option, two PL 25x225 may be used in lieu of PL 25x460 at bottom and sides of cable opening only, subject to review and approval of the Engineer.

LEGEND:

"Indicates SPCM web PL"

ALL DIMENSIONS ARE IN MILLIMETERS UNLESS OTHERWISE SHOWN

REGISTERED PROFESSIONAL ENGINEER Marwan N. Nader No. C 054426 Exp. 12/31/11 CIVIL STATE OF CALIFORNIA

FOR REVISIONS ONLY

CONTRACT CHANGE ORDER NO. ____
SHEET ___ OF ___

REQUESTS FOR INFORMATION NOT ADDRESSED IN THIS CCO REMAIN IN FORCE

R. Valizadeh/V. Toan/Y.L./W.L./F.C.
DESIGN OVERSIGHT
Roya Valizadeh / Vivian Toan / Y Lin
SIGN OFF DATE 09/01/11

MARK	DATE	DESCRIPTIONS	BY	CH'D	CCO#
2	09/01/11	EAST END OBG	GB	MN	87
1	11/05/10	PP119 ACCESS & PP125 PLATES	GB	DT	86

REVISIONS

DESIGN	BY G. Baker	CHECKED	P. Ritchie
DETAILS	BY S. Camo	CHECKED	T. McMeans
QUANTITIES	BY C. Mauch	CHECKED	M. Roberts

PREPARED FOR THE STATE OF CALIFORNIA DEPARTMENT OF TRANSPORTATION

R. Manzanarez
PROJECT ENGINEER

BRIDGE NO. 34-0006L/R
KILOMETER POST 13.2/13.9

SAN FRANCISCO OAKLAND BAY BRIDGE
EAST SPAN SEISMIC SAFETY PROJECT
SELF-ANCHORED SUSPENSION BRIDGE
(SUPERSTRUCTURE & TOWER)

FLOORBEAM AT EAST TRANSITION NO. 5

Rev. Date: 5-18-98

ORIGINAL SCALE IN MILLIMETERS FOR REDUCED PLANS 0 10 20 30 40 50 60 70 80 90 100

CU 04
EA 0120F1

DISREGARD PRINTS BEARING EARLIER REVISION DATES

REVISION DATES (PRELIMINARY STAGE ONLY): 05/15/99 08/02/99 05/31/01 04/08/02 07/01/02 12/18/02 11/13/05

SHEET 292R2 OF

FILE => I:\bb\04-012001\sas\contract plans and cco\cco\cco#87\1-original 09-01-11\dgn\agefd03.dgn

USERNAME => PTom DATE PLOTTED => 30 AUG 2011 TIME PLOTTED => 11:33:49

100% PS&E