DIST.	COUNTY	ROUTE	KILOMETER POST TOTAL PROJECT	SHEET NO.	TOTAL SHEETS
04	SF	80	13.2/13.9	704SIRI	1204

Caltrans Metric

REGISTERED ENGINEER - CIVIL

04-09-10
PLANS APPROVAL DATE

REGISTERED PROFESSIONAL ENGINEER Marwan N. Nader No. C 054426 Exp. 12/31/11 CIVIL STATE OF CALIFORNIA

The State of California or its officers or agents shall not be responsible for the accuracy or completeness of electronic copies of this plan sheet.

T.Y. LIN / MOFFATT & NICHOL
825 BATTERY STREET
SAN FRANCISCO, CA 94111

Caltrans now has a web site! To get to the web site, go to: http://www.dot.ca.gov

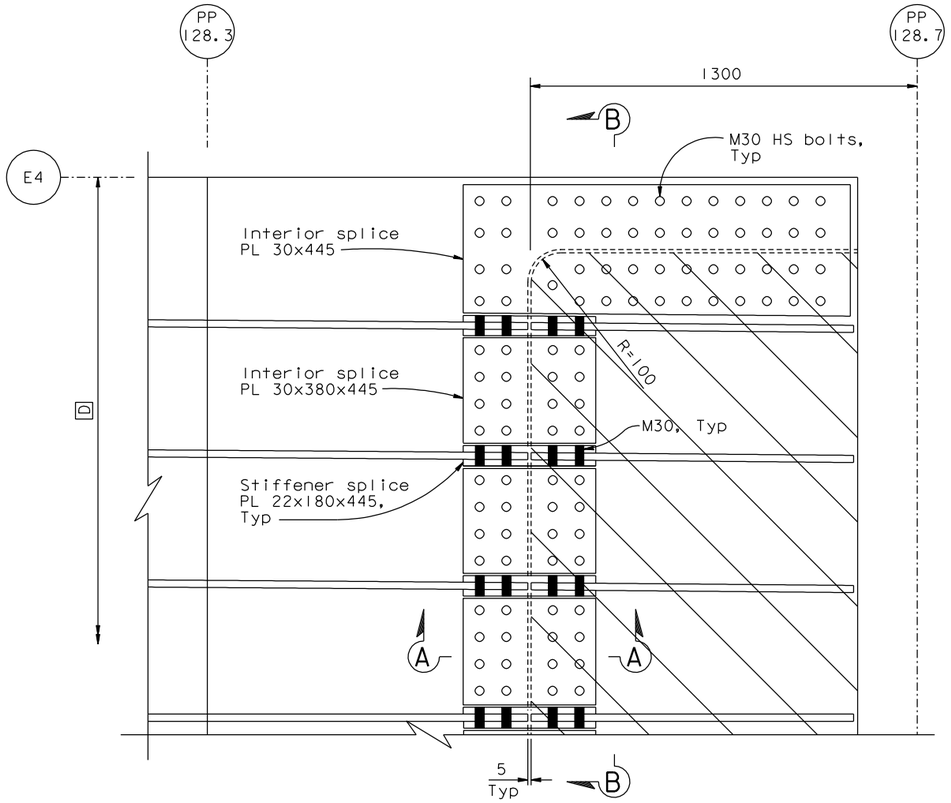

DETAIL C
1:10
("E" Line shown "W" Line similar)

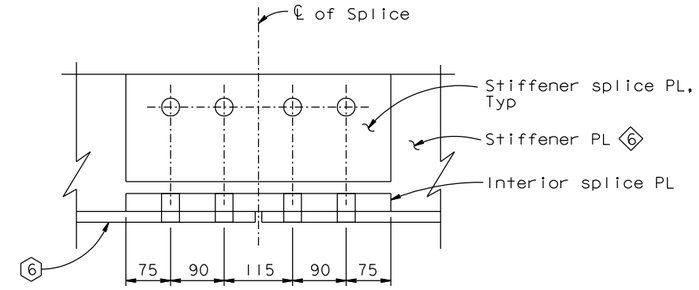

SECTION A-A
1:5

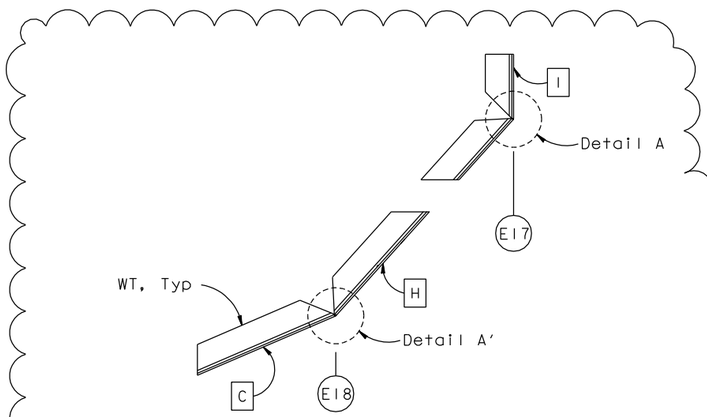

ARCHITECTURAL PLATE SPLICES AT CORNERS
1:20

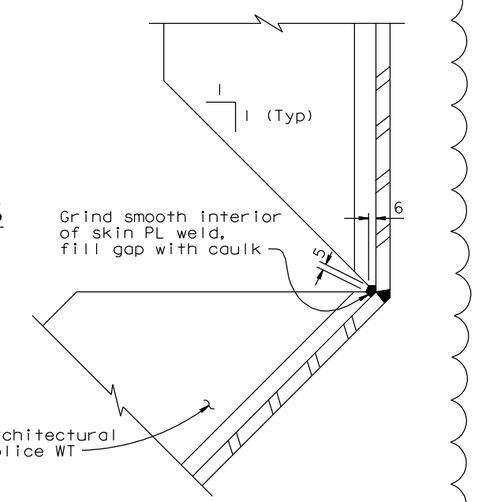

DETAIL A
1:2.5
(Shown, Detail A' Similar)

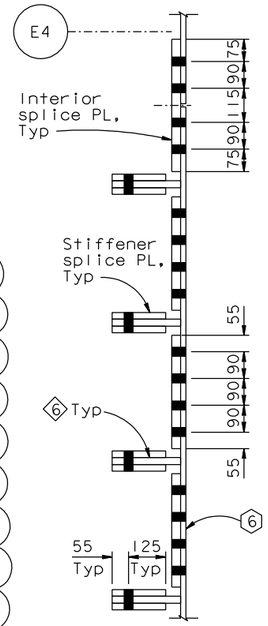

SECTION B-B
1:10

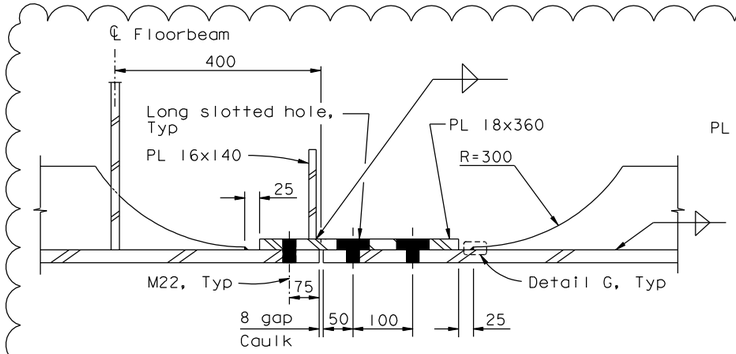

TRANSVERSE ARCHITECTURAL SPLICE DETAIL
1:5

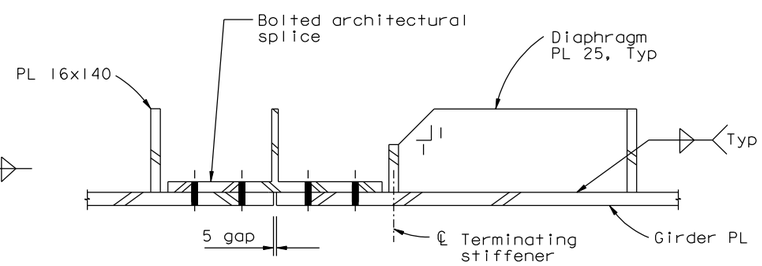

TERMINATING STIFFENER AT ARCHITECTURAL SPLICE DETAIL
1:5

LEGEND:
Indicates Field Installed Panel

CONTRACT CHANGE ORDER NO. ____
SHEET ____ OF ____

REQUESTS FOR INFORMATION NOT ADDRESSED IN THIS CCO REMAIN IN FORCE

ALL DIMENSIONS ARE IN MILLIMETERS UNLESS OTHERWISE SHOWN

R. Valizadeh/V. Toan/Y.L./W.L./F.C.
DESIGN OVERSIGHT
Ryan Valizadeh / Vong Toan / Y Liu
SIGN OFF DATE 09/01/11

MARK	DATE	DESCRIPTIONS	BY	CH'D	CCO#
1	09/01/11	EAST END OBG	DT	MN	87
0	04/09/10	HINGE A MODIFICATIONS	SS	MN	120

REVISIONS

	BY	CHECKED
DESIGN	S. Shi	M. Nader
DETAILS	S. Shi	M. Nader
QUANTITIES	S. Shi	M. Nader

PREPARED FOR THE STATE OF CALIFORNIA DEPARTMENT OF TRANSPORTATION

R. Manzanarez
PROJECT ENGINEER

BRIDGE NO. 34-0006L/R
KILOMETER POST 13.2/13.9

SAN FRANCISCO OAKLAND BAY BRIDGE
EAST SPAN SEISMIC SAFETY PROJECT
SELF-ANCHORED SUSPENSION BRIDGE
(SUPERSTRUCTURE & TOWER)

GIRDER AT EAST TRANSITION DETAILS NO. 5

Rev. Date: 5-18-98

ORIGINAL SCALE IN MILLIMETERS FOR REDUCED PLANS 0 10 20 30 40 50 60 70 80 90 100

CU 04
EA 0120F1

DISREGARD PRINTS BEARING EARLIER REVISION DATES 04/09/10

REVISION DATES (PRELIMINARY STAGE ONLY)

SHEET 287SIRI OF

FILE => I:\bb\04-012001\sas\contract plans and cco\cco\cco*87\1-original 09-01-11\dgn\agand15a.dgn

100% PS&E

DATE PLOTTED => 30 AUG 2011 TIME PLOTTED => 12:49:34

USERNAME => PTom