DIST.	COUNTY	ROUTE	KILOMETER POST TOTAL PROJECT	SHEET NO.	TOTAL SHEETS
04	SF	80	13.2/13.9	700R1	1204

Caltrans Metric

George Baker
REGISTERED ENGINEER - CIVIL

12-6-04
PLANS APPROVAL DATE

REGISTERED PROFESSIONAL ENGINEER George S. Baker No. C 57112 Exp. 12/31/05 CIVIL STATE OF CALIFORNIA

The State of California or its officers or agents shall not be responsible for the accuracy or completeness of electronic copies of this plan sheet.

T.Y. LIN / MOFFATT & NICHOL
825 BATTERY STREET
SAN FRANCISCO, CA 94111

Caltrans now has a web site! To get to the web site, go to: http://www.dot.ca.gov

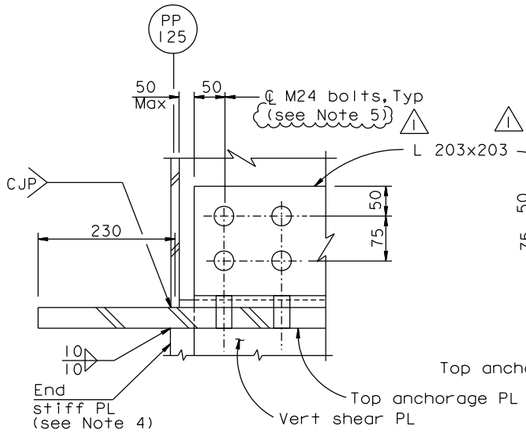

DETAIL A
1:5

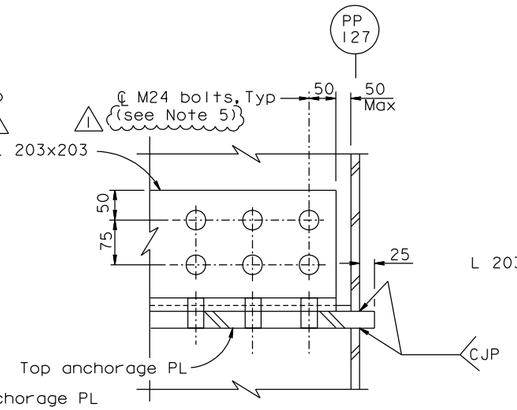

DETAIL B
1:5

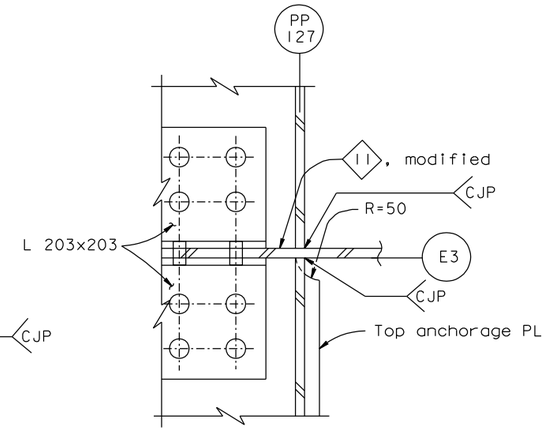

DETAIL C (Detail C' similar)
1:5

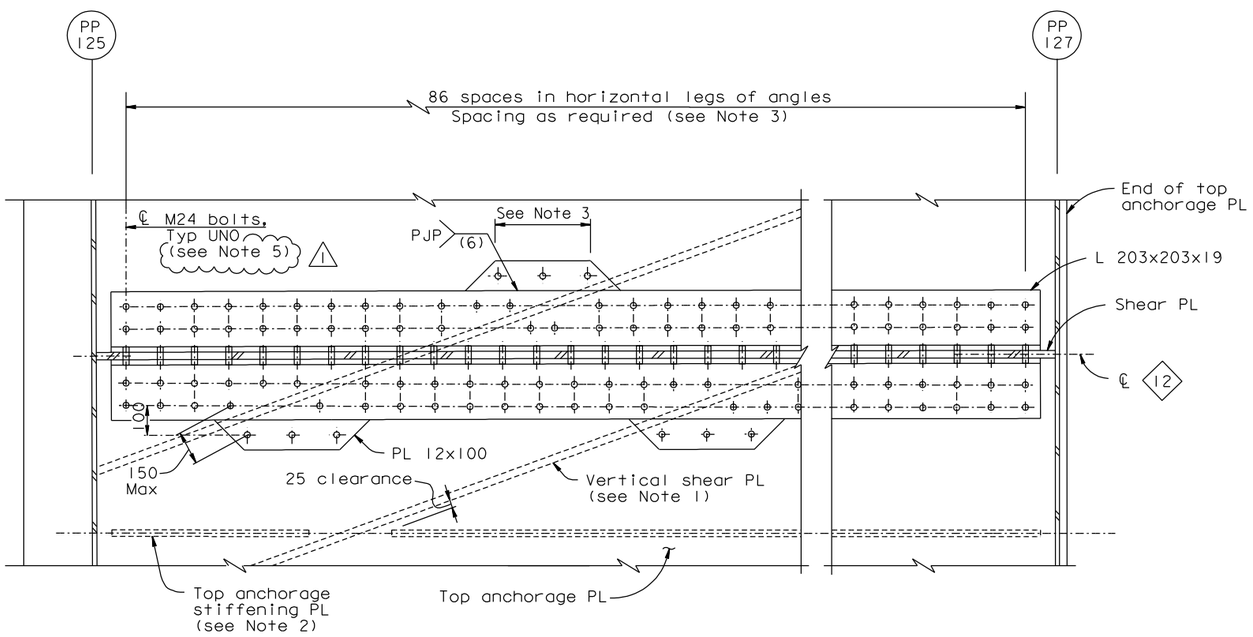

DETAIL D
1:10

LEGEND:

⊕ High strength bolt

NOTES:

1. For details of vertical shear PL in east anchorage, see "East Cable Anchorage "E" Line Layout" and "East Cable Anchorage "W" Line Layout" sheets.
2. For spacing of top anchorage stiffening plates, see "Girder At East Transition No.5" and "Girder At East Transition No.6" sheets.
3. At each vertical shear PL, the bolt spaces in the L203 connection angles shall be detailed according to the Bolt Dimension Table on "Typical Girder Details No.1" sheet. Where the vertical shear PL interferes with placement of the indicated number of bolts, or the permissible maximum bolt spacing, then an outrigger PL shall be used as shown in Detail D. The length and placement of the outrigger shall be sufficient to seal the connection angle and to accommodate the displaced number of bolts.
4. For end stiffener PL, see "East Cable Anchorage "E" line Layout No.2" sheet.
5. (1) Oversize holes are acceptable for both the vertical and horizontal legs of the L 203x203x19 and the top anchor PL.

REGISTERED PROFESSIONAL ENGINEER Marwan N. Nader No. C 054426 Exp. 12/31/11 CIVIL STATE OF CALIFORNIA

FOR REVISIONS ONLY

CONTRACT CHANGE ORDER NO. _____
SHEET ___ OF ___

REQUESTS FOR INFORMATION NOT ADDRESSED IN THIS CCO REMAIN IN FORCE

ALL DIMENSIONS ARE IN MILLIMETERS UNLESS OTHERWISE SHOWN

R. Valizadeh/V. Toan/Y.L./W.L./F.C.
DESIGN OVERSIGHT
Roya Valizadeh / Vong Toan / Y Liu
SIGN OFF DATE 09/01/11

MARK	DATE	DESCRIPTIONS	BY	CH'D	CCO#
1	09/01/11	EAST END OBG	GB	MN	87

REVISIONS

	BY	CHECKED
DESIGN	G. Baker	P. Ritchie
DETAILS	S. Camo	T. McMeans
QUANTITIES	G. Baker	M. Roberts

PREPARED FOR THE STATE OF CALIFORNIA DEPARTMENT OF TRANSPORTATION

R. Manzanarez
PROJECT ENGINEER

BRIDGE NO. 34-0006L/R
KILOMETER POST 13.2/13.9

SAN FRANCISCO OAKLAND BAY BRIDGE
EAST SPAN SEISMIC SAFETY PROJECT
SELF-ANCHORED SUSPENSION BRIDGE
(SUPERSTRUCTURE & TOWER)

GIRDER AT EAST TRANSITION NO. 18

Rev. Date: 5-18-98

ORIGINAL SCALE IN MILLIMETERS FOR REDUCED PLANS 0 10 20 30 40 50 60 70 80 90 100

CU 04
EA 0120F1

DISREGARD PRINTS BEARING EARLIER REVISION DATES

REVISION DATES (PRELIMINARY STAGE ONLY) 05/28/99 08/20/99 05/31/01 04/08/02 01/04/02 12/18/02 11/13/05

SHEET 283R1 OF

FILE => I:\bb\04-012001\sas\contract plans and cco\cco\cco*87\1-original 09-01-11\dgn\agand12.dgn

USERNAME => PTom DATE PLOTTED => 30 AUG 2011 TIME PLOTTED => 09:42:47

100% PS&E