DIST.	COUNTY	ROUTE	KILOMETER POST TOTAL PROJECT	SHEET NO.	TOTAL SHEETS
04	SF	80	13.2/13.9	699R1	1204

George Baker
REGISTERED ENGINEER - CIVIL
12-6-04
PLANS APPROVAL DATE

REGISTERED PROFESSIONAL ENGINEER George S. Baker No. C57112 Exp. 12/31/05 CIVIL STATE OF CALIFORNIA

The State of California or its officers or agents shall not be responsible for the accuracy or completeness of electronic copies of this plan sheet.

T.Y. LIN / MOFFATT & NICHOL
825 BATTERY STREET
SAN FRANCISCO, CA 94111

Caltrans now has a web site! To get to the web site, go to: http://www.dot.ca.gov

Caltrans Metric

LEGEND:

"Indicates SPCM PL"

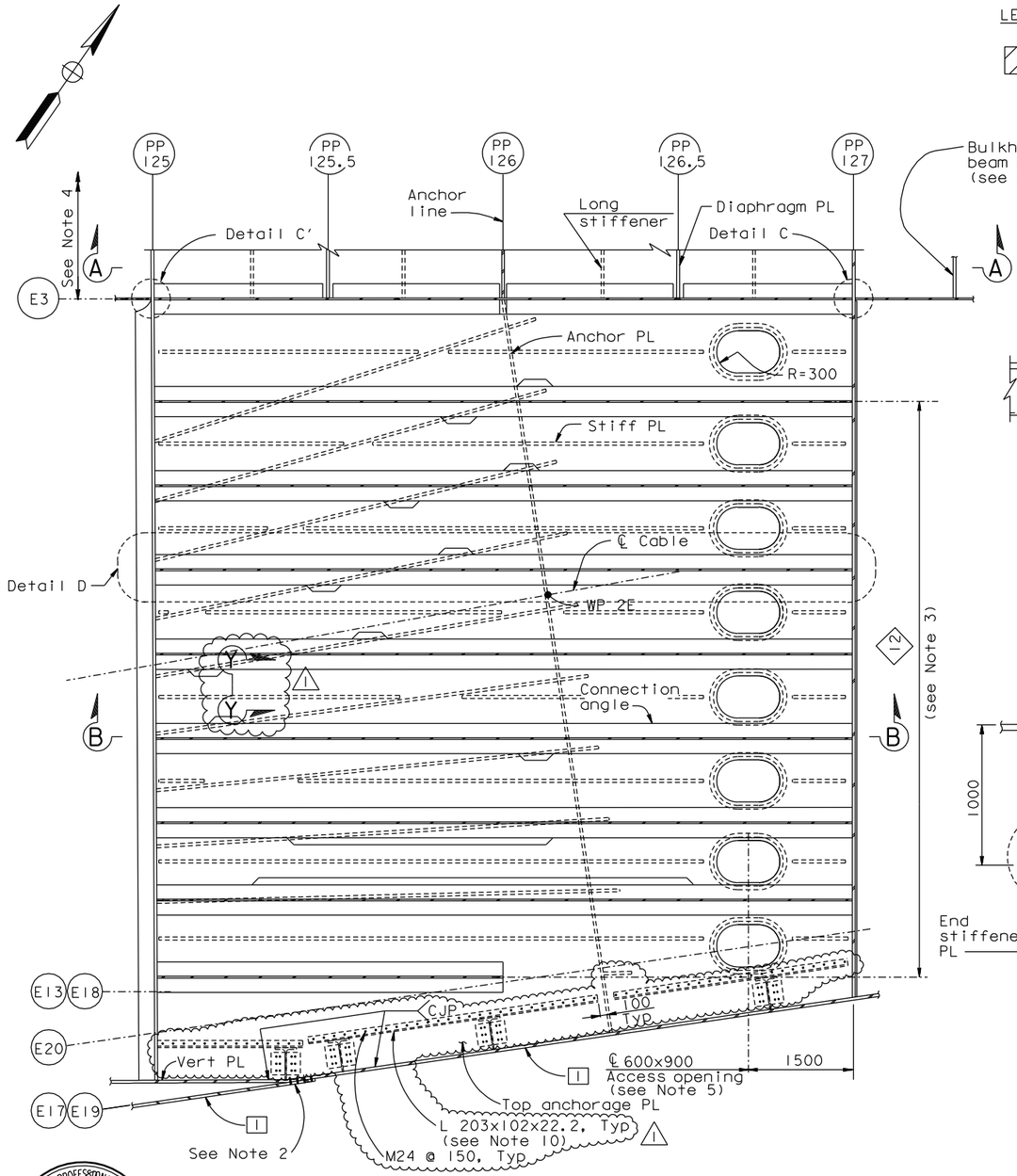

AT LEVEL OF TOP ANCHORAGE PLATE

PLAN SECTION

1:40

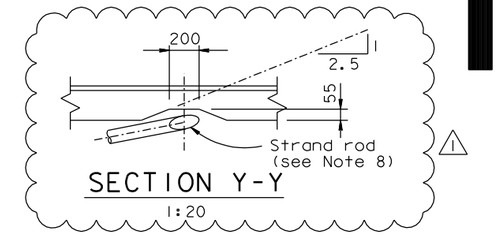

SECTION Y-Y

1:20

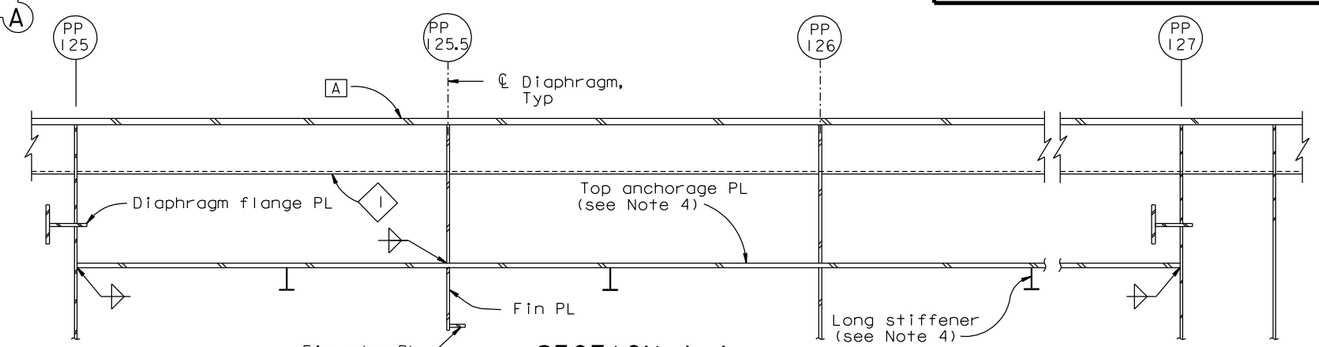

SECTION A-A (See Note 4)

1:20

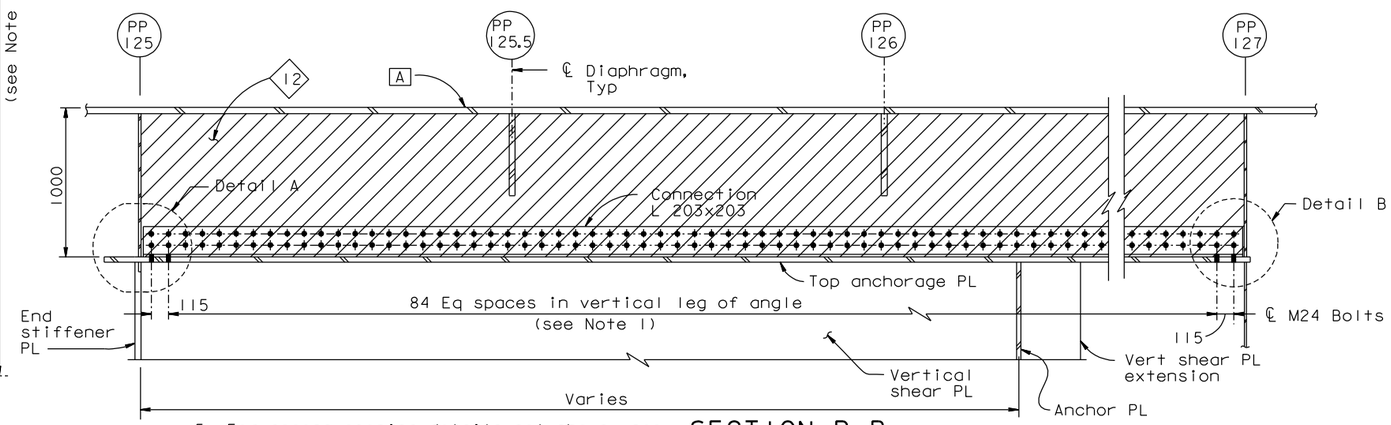

SECTION B-B

1:20

5. For access opening details not shown, see "Typical Girder Details No.7" sheet.
6. For bulkhead, see "Hinge A Details" sheets.
7. For Details A, B, C, C' and D, see "Girder At East Transition No.18" sheet.
8. Section Y-Y shall apply as required to provide 20 Min clearance to strand rod.
9. Top anchorage PL stiffener plates may be coped to provide additional clearance from strands, subject to review and approval of the Engineer.
10. At the Contractor's option, an equivalent built-up shape may be used, subject to review and approval of the Engineer.

NOTES:

1. For connection details of connection angleto top anchor PL, see "Girder At East Transition No.18" sheet.
2. For connection of vertical PL to girder PL 1, see "Girder At East Transition Details No.3" sheet.
3. For 12 spacing, see "Girder At East Transition No.6" sheet.
4. For details of top anchorage PL not shown, see "Crossbeam At East Anchorage" sheets.

REGISTERED PROFESSIONAL ENGINEER Marwan N. Nader No. C 054426 Exp. 12/31/13 CIVIL STATE OF CALIFORNIA

FOR REVISIONS ONLY

CONTRACT CHANGE ORDER NO. _____
SHEET ____ OF ____

REQUESTS FOR INFORMATION NOT ADDRESSED IN THIS CCO REMAIN IN FORCE

ALL DIMENSIONS ARE IN MILLIMETERS UNLESS OTHERWISE SHOWN

R. Valizadeh/V. Toan/Y.L./W.L./F.C.
DESIGN OVERSIGHT
Roya Valizadeh / Vong Toan / Y Liu
SIGN OFF DATE 04/18/12

MARK	DATE	DESCRIPTIONS	BY	CH'D	CCO#
1	04/18/12	EAST END OBG	MN	GB	87

REVISIONS

	BY	CHECKED
DESIGN	G. Baker	P. Ritchie
DETAILS	M. Guiyas	T. McMeans
QUANTITIES	G. Baker	M. Roberts

PREPARED FOR THE STATE OF CALIFORNIA DEPARTMENT OF TRANSPORTATION

R. Manzanarez
PROJECT ENGINEER

BRIDGE NO. 34-0006L/R
KILOMETER POST 13.2/13.9

SAN FRANCISCO OAKLAND BAY BRIDGE
EAST SPAN SEISMIC SAFETY PROJECT
SELF-ANCHORED SUSPENSION BRIDGE
(SUPERSTRUCTURE & TOWER)

GIRDER AT EAST TRANSITION NO. 17

Rev. Date: 5-18-98

ORIGINAL SCALE IN MILLIMETERS FOR REDUCED PLANS 0 10 20 30 40 50 60 70 80 90 100

CU 04
EA 0120F1

DISREGARD PRINTS BEARING EARLIER REVISION DATES

REVISION DATES (PRELIMINARY STAGE ONLY): 01/15/99 05/13/99 08/02/99 05/31/01 04/08/02 07/01/02 12/19/02

SHEET 282R1 OF

FILE => L:\BB\04-012001\SAS\Contract Plans and CCO\CCO\CCO#87\temp\agandi1.dgn

100 % PS&E

USERNAME => DWinrow DATE PLOTTED => 18 APR 2012 TIME PLOTTED => 11:15:37