DIST.	COUNTY	ROUTE	KILOMETER POST TOTAL PROJECT	SHEET NO.	TOTAL SHEETS
04	SF	80	13.2/13.9	685R1	1204

Caltrans Metric

George Baker
REGISTERED ENGINEER - CIVIL

12-6-04
PLANS APPROVAL DATE

REGISTERED PROFESSIONAL ENGINEER George S. Baker No. C 57112 Exp. 12/31/05 CIVIL STATE OF CALIFORNIA

The State of California or its officers or agents shall not be responsible for the accuracy or completeness of electronic copies of this plan sheet.

T.Y. LIN / MOFFATT & NICHOL
825 BATTERY STREET
SAN FRANCISCO, CA 94111

Caltrans now has a web site! To get to the web site, go to: http://www.dot.ca.gov

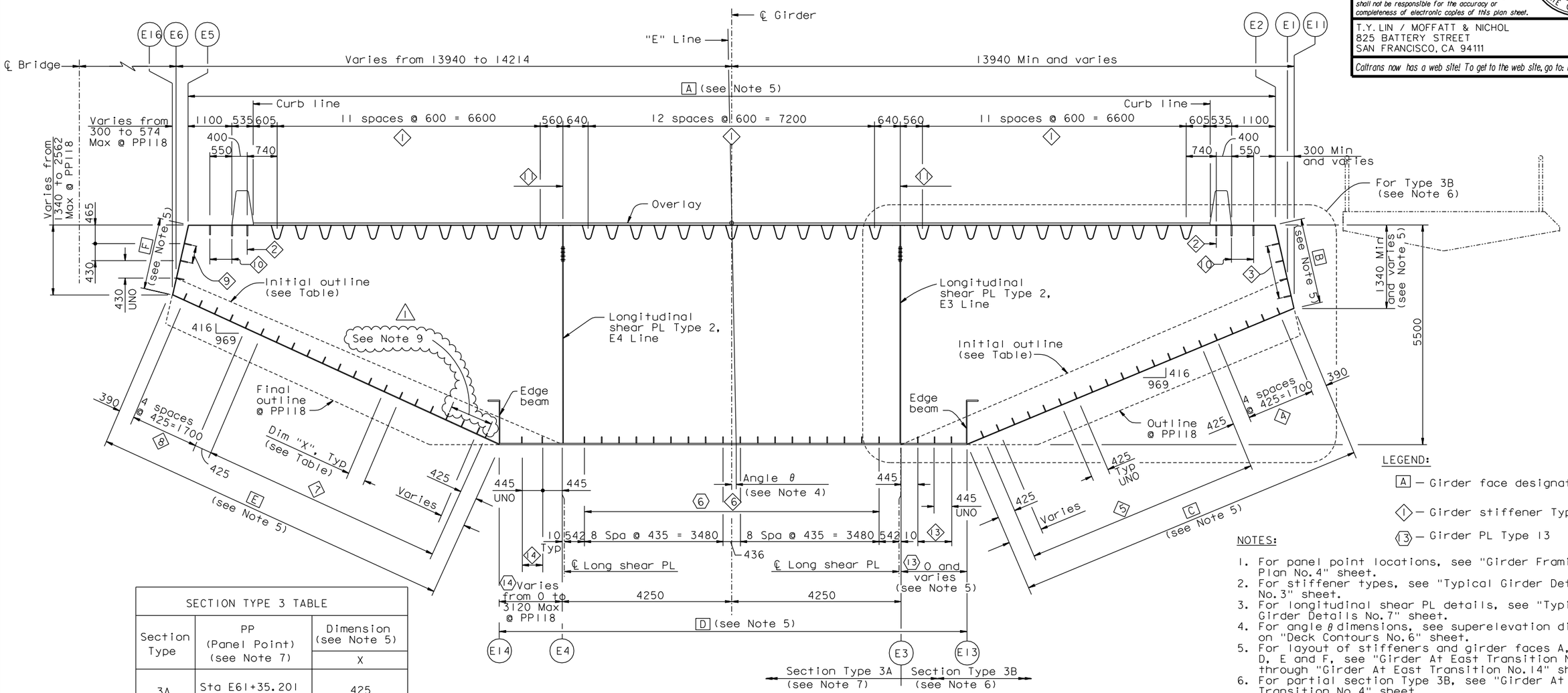

"E" LINE

SECTION TYPE 3 (East Transition)

1:50

LEGEND:

A — Girder face designation A

1 — Girder stiffener Type 1

13 — Girder PL Type 13

NOTES:

1. For panel point locations, see "Girder Framing Plan No. 4" sheet.
2. For stiffener types, see "Typical Girder Details No. 3" sheet.
3. For longitudinal shear PL details, see "Typical Girder Details No. 7" sheet.
4. For angle θ dimensions, see superelevation diagram on "Deck Contours No. 6" sheet.
5. For layout of stiffeners and girder faces A, B, C, D, E and F, see "Girder At East Transition No. 11" through "Girder At East Transition No. 14" sheets.
6. For partial section Type 3B, see "Girder At East Transition No. 4" sheet.
7. Girder section shown excludes girder at floorbeam E2. For girder section at floorbeam E2, see "Girder At Pier E2" sheets.
8. For layout of working points in east transition, see "Girder At East Transition No. 9 and "Girder At East Transition No. 10" sheets.
9. At the Contractor's option, three equal spaces no greater than 425 may be provided between PP119.3 and PP127. Stiffener lines shall be continuous.

SECTION TYPE 3 TABLE

Section Type	PP (Panel Point) (see Note 7)	Dimension (see Note 5) X
3A	Sta E61+35.201 to PP124	425
3B	118 To 119	425
3B	119 To 124	425

REGISTERED PROFESSIONAL ENGINEER Daniel J. Turner No. C 65033 Exp. 06/30/13 CIVIL STATE OF CALIFORNIA

FOR REVISIONS ONLY

CONTRACT CHANGE ORDER NO. _____
SHEET ____ OF ____

REQUESTS FOR INFORMATION NOT ADDRESSED IN THIS CCO REMAIN IN FORCE

ALL DIMENSIONS ARE IN MILLIMETERS UNLESS OTHERWISE SHOWN

R. Valizadeh/V. Toan/Y.L./W.L./F.C.
DESIGN OVERSIGHT
SIGN OFF DATE 09/01/11

MARK	DATE	DESCRIPTIONS	BY	CH'D	CCO#
1	09/01/11	EAST END OBG	GB	DT	87

REVISIONS

	BY	CHECKED
DESIGN	G. Baker	P. Ritchie
DETAILS	M. Gulyas	T. McMeans
QUANTITIES	G. Baker	M. Roberts

PREPARED FOR THE STATE OF CALIFORNIA DEPARTMENT OF TRANSPORTATION

R. Manzanarez
PROJECT ENGINEER

BRIDGE NO. 34-0006L/R
KILOMETER POST 13.2/13.9

SAN FRANCISCO OAKLAND BAY BRIDGE
EAST SPAN SEISMIC SAFETY PROJECT
SELF-ANCHORED SUSPENSION BRIDGE
(SUPERSTRUCTURE & TOWER)

GIRDER AT EAST TRANSITION NO. 3

Rev. Date: 5-18-98

ORIGINAL SCALE IN MILLIMETERS FOR REDUCED PLANS 0 10 20 30 40 50 60 70 80 90 100

CU 04
EA 0120F1

DISREGARD PRINTS BEARING EARLIER REVISION DATES

REVISION DATES (PRELIMINARY STAGE ONLY): 01/15/99 05/13/99 08/02/99 05/31/01 04/08/02 07/01/02 12/19/02

SHEET 268R1 OF

FILE => I:\bb\04-012001\sas\contract plans and cco\cco\cco#87\1-original 09-01-11\dgn\agegd03.dgn

100 % PS&E

USERNAME => ALTshansk DATE PLOTTED => 30 AUG 2013 TIME PLOTTED => 12:01