DIST.	COUNTY	ROUTE	KILOMETER POST TOTAL PROJECT	SHEET NO.	TOTAL SHEETS
04	SF	80	13.2/13.9	682R2	1204

Caltrans Metric

George Baker
REGISTERED ENGINEER - CIVIL
12-6-04
PLANS APPROVAL DATE

REGISTERED PROFESSIONAL ENGINEER George S. Baker No. C57112 Exp. 12/31/05 CIVIL STATE OF CALIFORNIA

The State of California or its officers or agents shall not be responsible for the accuracy or completeness of electronic copies of this plan sheet.

T.Y. LIN / MOFFATT & NICHOL
825 BATTERY STREET
SAN FRANCISCO, CA 94111

Caltrans now has a web site! To get to the web site, go to: http://www.dot.ca.gov

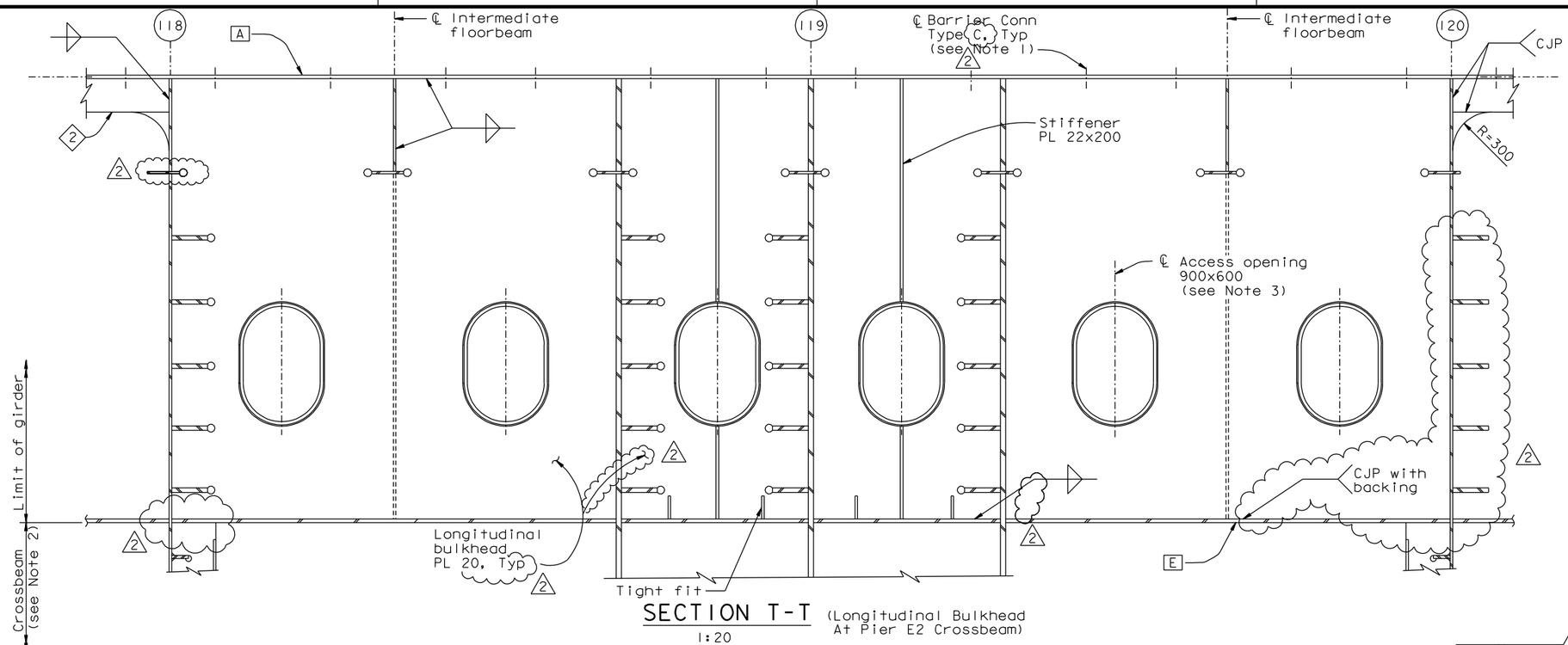

SECTION T-T (Longitudinal Bulkhead At Pier E2 Crossbeam)

1:20

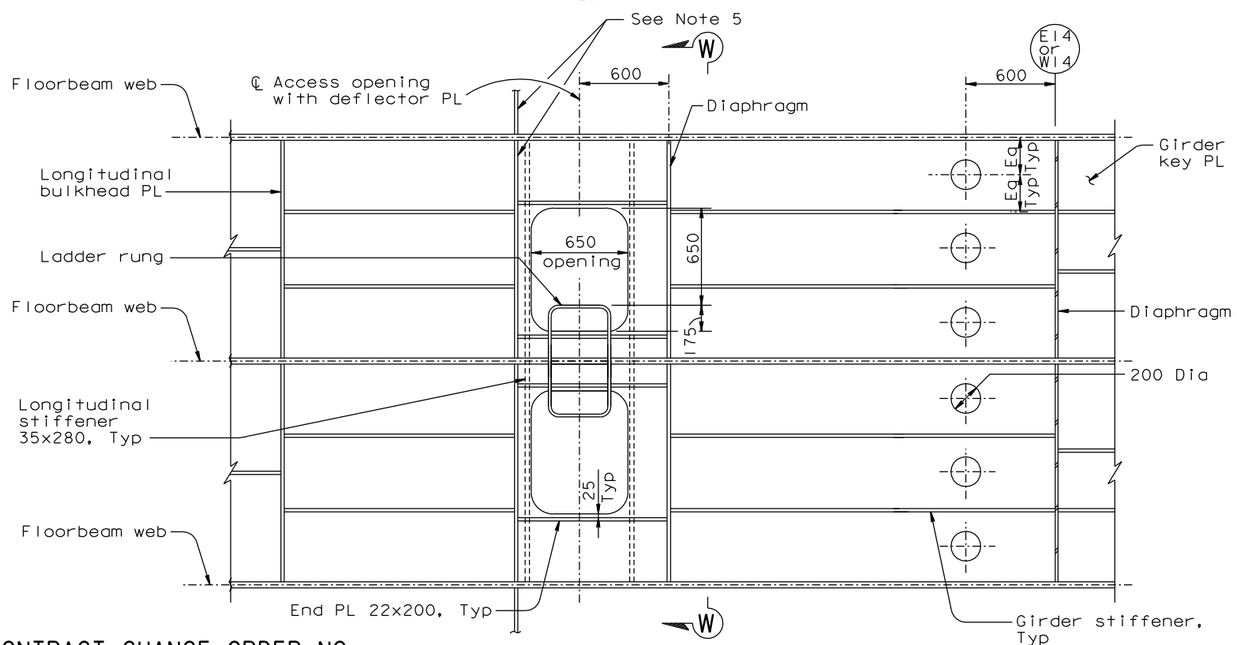

SECTION V-V

1:20

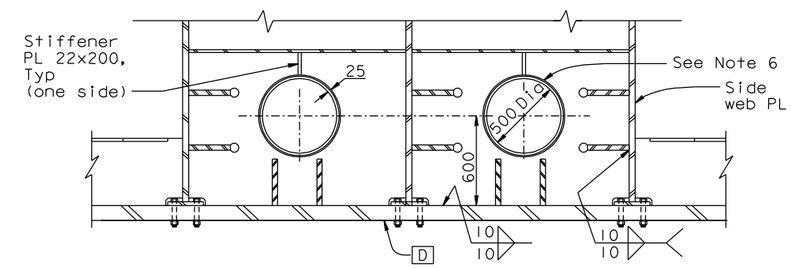

SECTION W-W

1:20

NOTES:

2

1. For details and connection spacing, see "Typical Girder Details No.12" and "Typical Girder Details No.14" sheets.
2. For details, see "Crossbeam At Pier E2" sheets.
3. For opening details, see "Typical Girder Details No.7" sheet.
4. For Section V-V opening details, see "Typical Girder Details No.15" sheet.
5. Access opening stiffener shall align with the longitudinal stiffener.
6. For opening details not shown, see "Typical Girder Details No.7" sheet.

REGISTERED PROFESSIONAL ENGINEER Marwan N. Nader No. C 054426 Exp. 12/31/13 CIVIL STATE OF CALIFORNIA

FOR REVISIONS ONLY

CONTRACT CHANGE ORDER NO. _____
SHEET ___ OF ___

REQUESTS FOR INFORMATION NOT ADDRESSED IN THIS CCO REMAIN IN FORCE

ALL DIMENSIONS ARE IN MILLIMETERS UNLESS OTHERWISE SHOWN

R. Valizadeh/V. Toan/Y.L./W.L./F.C.
DESIGN OVERSIGHT
Rezo Valizadeh / Vong Toan / Y Liu
SIGN OFF DATE 04/18/12

MARK	DATE	DESCRIPTIONS	BY	CH'D	CCO#
2	04/18/12	EAST END OBG	GB	MN	87
1	11/05/10	PP119 ACCESS & PP125 PLATES	GB	DT	86

REVISIONS

DESIGN	BY	G. Baker	CHECKED	P. Ritchie
DETAILS	BY	C. Mauch	CHECKED	T. McMeans
QUANTITIES	BY	D. Turner	CHECKED	M. Roberts

PREPARED FOR THE STATE OF CALIFORNIA DEPARTMENT OF TRANSPORTATION

R. Manzanarez
PROJECT ENGINEER

BRIDGE NO. 34-0006L/R
KILOMETER POST 13.2/13.9

SAN FRANCISCO OAKLAND BAY BRIDGE
EAST SPAN SEISMIC SAFETY PROJECT
SELF-ANCHORED SUSPENSION BRIDGE
(SUPERSTRUCTURE & TOWER)

GIRDER AT PIER E2 NO. 9

Rev. Date: 5-18-98

ORIGINAL SCALE IN MILLIMETERS FOR REDUCED PLANS 0 10 20 30 40 50 60 70 80 90 100

CU 04
EA 0120F1

DISREGARD PRINTS BEARING EARLIER REVISION DATES

REVISION DATES (PRELIMINARY STAGE ONLY) 05/15/99 08/02/99 05/31/01 04/08/02 07/04/02 12/18/02 11/13/05 12/07/05

SHEET 265R2 OF

FILE => I:\bb\04-012001\sas\contract plans and cco\cco\cco*87\temp\aggdd14.dgn

USERNAME => DWinrow DATE PLOTTED => 18 APR 2012 TIME PLOTTED => 11:11:13

100% PS&E