DIST.	COUNTY	ROUTE	KILOMETER POST TOTAL PROJECT	SHEET NO.	TOTAL SHEETS
04	SF	80	13.2/13.9	681R1	1204

Caltrans Metric

George Baker
REGISTERED ENGINEER - CIVIL
12/6/04
PLANS APPROVAL DATE

REGISTERED PROFESSIONAL ENGINEER George S. Baker No. C 57112 Exp. 12/31/05 CIVIL STATE OF CALIFORNIA

The State of California or its officers or agents shall not be responsible for the accuracy or completeness of electronic copies of this plan sheet.

T.Y. LIN / MOFFATT & NICHOL
825 BATTERY STREET
SAN FRANCISCO, CA 94111

Caltrans now has a web site! To get to the web site, go to: http://www.dot.ca.gov

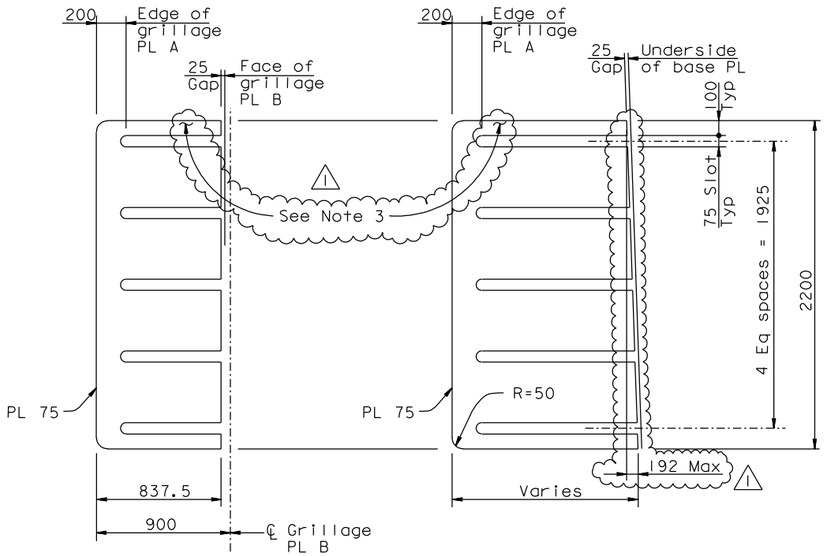

PLATE C

PLATE B

GRILLAGE PLATE DETAILS
1:20

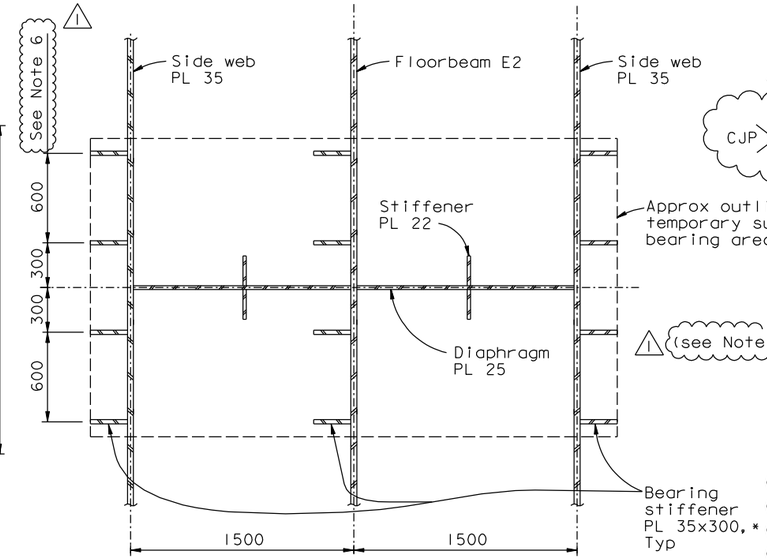

SECTION U-U
(* For Bearing Replacement)
1:20

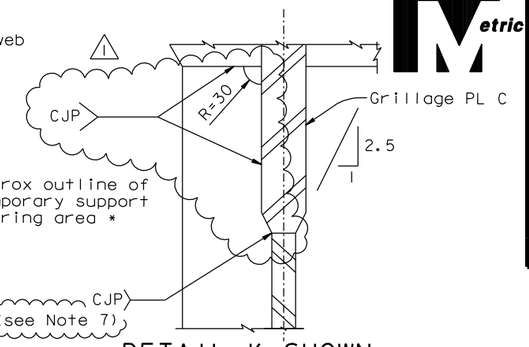

DETAIL K SHOWN, DETAIL K' SIMILAR
1:5

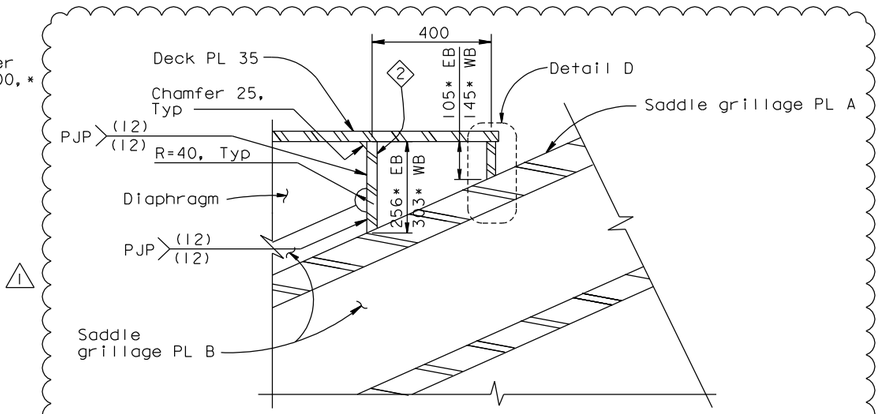

SECTION C-C
(EB shown, WB Section C'-C' similar)
1:10

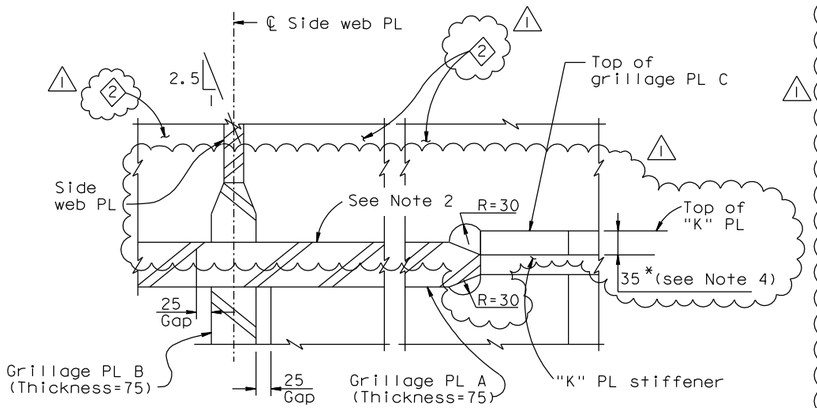

DETAIL A
1:5

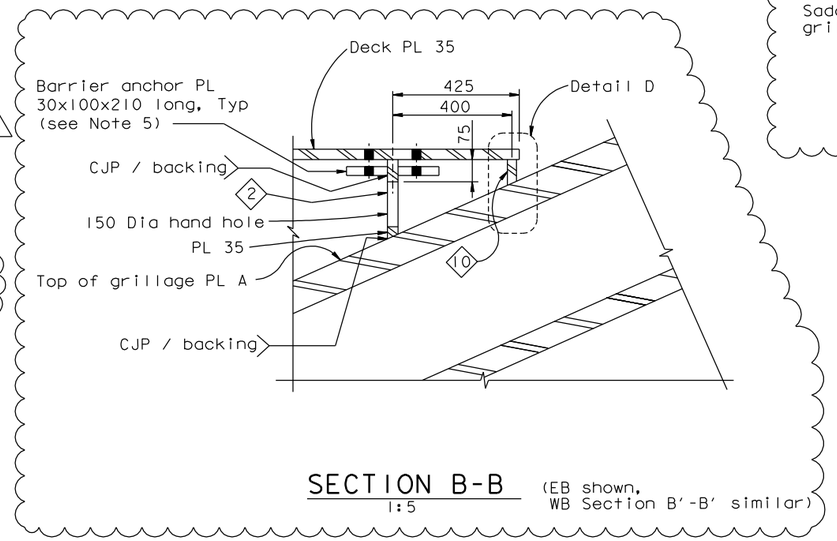

SECTION B-B
(EB shown, WB Section B'-B' similar)
1:5

NOTES:

1. For typical stiffener termination, see "Typical Floorbeam Details No.6" sheet.
2. Extend or trim stiffener Type 2 to meet grillage PL A based on final cable geometry.
3. Trim grillage Plate B and C as shown on "Section C-C" and "Detail A" respectively.
4. Dimensions marked with an asterisk shall be revised based on the final cable geometry.
5. Barrier anchor shall be 310 long if detailing per "Alternative Barrier Connection Detail" on "Typical Girder Details No.14" sheet.
6. At the Contractor's option, stiffener may be offset +/- 5 mm, subject to review and approval of the Engineer.
7. At the Contractor's option, to accommodate updates in the fabrication procedure, a rathole (R=30) in the stiffener is acceptable to allow grillage PL B to Floorbeam web weld.

REGISTERED PROFESSIONAL ENGINEER Marwan N. Nader No. C 054426 Exp. 12/31/11 CIVIL STATE OF CALIFORNIA

FOR REVISIONS ONLY

CONTRACT CHANGE ORDER NO. _____
SHEET ____ OF ____

REQUESTS FOR INFORMATION NOT ADDRESSED IN THIS CCO REMAIN IN FORCE

ALL DIMENSIONS ARE IN MILLIMETERS UNLESS OTHERWISE SHOWN

R. Valizadeh/V. Toan/Y.L./W.L./F.C.
DESIGN OVERSIGHT
SIGN OFF DATE 09/01/11

MARK	DATE	DESCRIPTIONS	BY	CH'D	CCO#
1	09/01/11	EAST END OBG	GB	MN	87

REVISIONS

DESIGN	BY G. Baker	CHECKED	P. Ritchie
DETAILS	BY C. Mauch	CHECKED	T. McMeans
QUANTITIES	BY D. Turner	CHECKED	M. Roberts

PREPARED FOR THE STATE OF CALIFORNIA DEPARTMENT OF TRANSPORTATION

R. Manzanarez
PROJECT ENGINEER

BRIDGE NO. 34-0006L/R
KILOMETER POST 13.2/13.9

SAN FRANCISCO OAKLAND BAY BRIDGE
EAST SPAN SEISMIC SAFETY PROJECT
SELF-ANCHORED SUSPENSION BRIDGE
(SUPERSTRUCTURE & TOWER)

GIRDER AT PIER E2 NO.8

Rev. Date: 5-18-98

ORIGINAL SCALE IN MILLIMETERS FOR REDUCED PLANS 0 10 20 30 40 50 60 70 80 90 100

CU 04
EA 0120F1

DISREGARD PRINTS BEARING EARLIER REVISION DATES

REVISION DATES (PRELIMINARY STAGE ONLY) 05/15/99 08/02/99 05/31/01 04/08/02 07/01/02 12/13/02 11/13/05

SHEET 264R1 OF

FILE => I:\bb\04-012001\sas\contract plans and cco\cco\cco*87\1-original 09-01-11\dgn\aggdd13.dgn

USERNAME => ALishansk DATE PLOTTED => 30 AUG 2011 TIME PLOTTED =>

100% PS&E