DIST.	COUNTY	ROUTE	KILOMETER POST TOTAL PROJECT	SHEET NO.	TOTAL SHEETS
04	SF	80	13.2/13.9	679S1	1204

REGISTERED ENGINEER - CIVIL

04-18-12

PLANS APPROVAL DATE

REGISTERED PROFESSIONAL ENGINEER Marwan N. Nader No. C 054426 Exp. 12/31/13 CIVIL STATE OF CALIFORNIA

The State of California or its officers or agents shall not be responsible for the accuracy or completeness of electronic copies of this plan sheet.

T.Y. LIN / MOFFATT & NICHOL
825 BATTERY STREET
SAN FRANCISCO, CA 94111

Caltrans now has a web site! To get to the web site, go to: http://www.dot.ca.gov

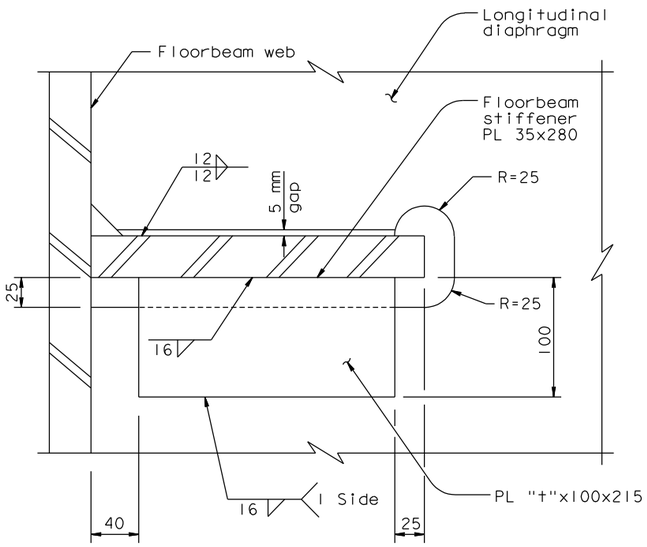

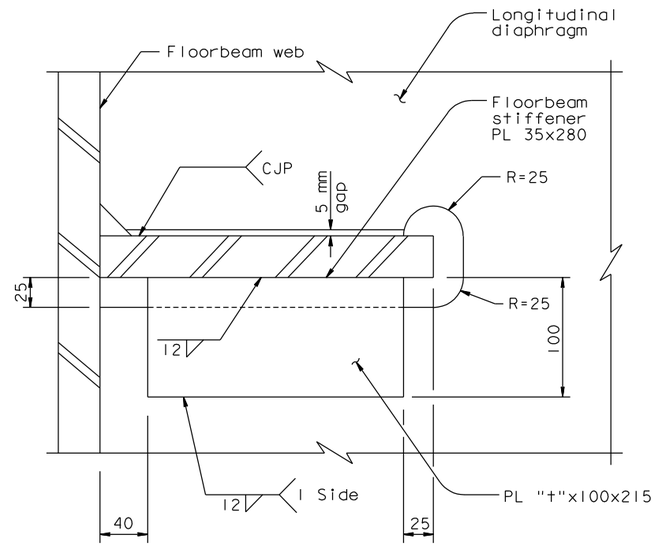

SINGLE FIT LUG OPTIONS (See Note 1)

PIER E2 LONGITUDINAL DIAPHRAGM CUT-OUTS

1:2.5

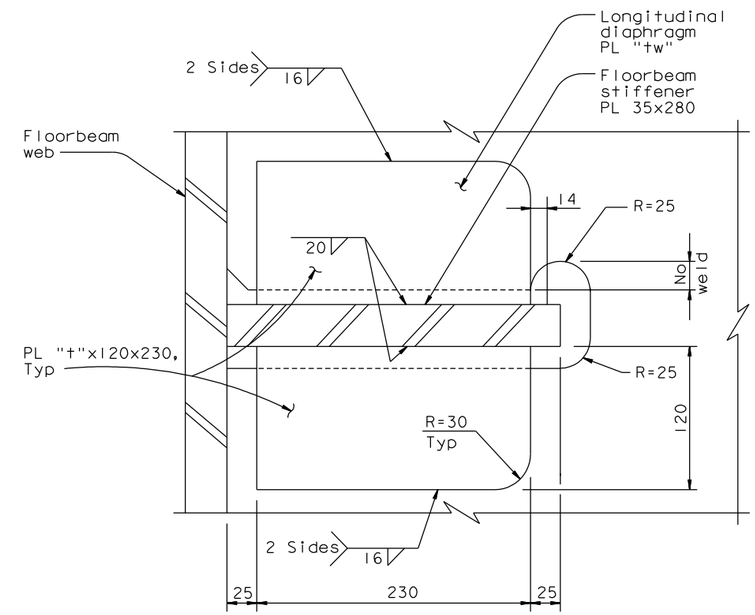

DOUBLE FIT LUG OPTION

1:2.5

NOTES:

1. Lug thickness "t" shall match the longitudinal diaphragm thickness.
2. For tw=20, t=22. For tw=25, t=25.

CONTRACT CHANGE ORDER NO. _____
SHEET ____ OF ____

REQUESTS FOR INFORMATION NOT ADDRESSED IN THIS CCO REMAIN IN FORCE

ALL DIMENSIONS ARE IN MILLIMETERS UNLESS OTHERWISE SHOWN

R. Valizadeh/V. Toan/Y.L./W.L./F.C.
DESIGN OVERSIGHT
SIGN OFF DATE 04/18/12

MARK	DATE	DESCRIPTIONS	BY	CH'D	CCO#
0	04/18/12	EAST END OBG	GB	MN	87

REVISIONS

	BY	CHECKED
DESIGN	G. Baker	M. Nader
DETAILS	G. Baker	D. Turner
QUANTITIES	G. Baker	D. Turner

PREPARED FOR THE STATE OF CALIFORNIA DEPARTMENT OF TRANSPORTATION

R. Manzanarez
PROJECT ENGINEER

BRIDGE NO. 34-0006L/R
KILOMETER POST 13.2/13.9

SAN FRANCISCO OAKLAND BAY BRIDGE
EAST SPAN SEISMIC SAFETY PROJECT
SELF-ANCHORED SUSPENSION BRIDGE
(SUPERSTRUCTURE & TOWER)

GIRDER AT PIER E2 NO. 6A

Rev. Date: 5-18-98

ORIGINAL SCALE IN MILLIMETERS FOR REDUCED PLANS 0 10 20 30 40 50 60 70 80 90 100

CU 04
EA 0120F1

DISREGARD PRINTS BEARING EARLIER REVISION DATES

REVISION DATES (PRELIMINARY STAGE ONLY) 04/18/12

SHEET 262S1 OF

FILE => I:\bb\04-012001\sas\contract plans and cco\cco\cco*87\temp\aggdd12a.dgn

100% PS&E

USERNAME => DWinrow DATE PLOTTED => 18 APR 2012 TIME PLOTTED => 11:09:17